HUDSON Service Merchandiser

Dedicated to the interest of field service, parts and accessory merchandising.

VOL. 4 NO. 8 AUGUST 1952

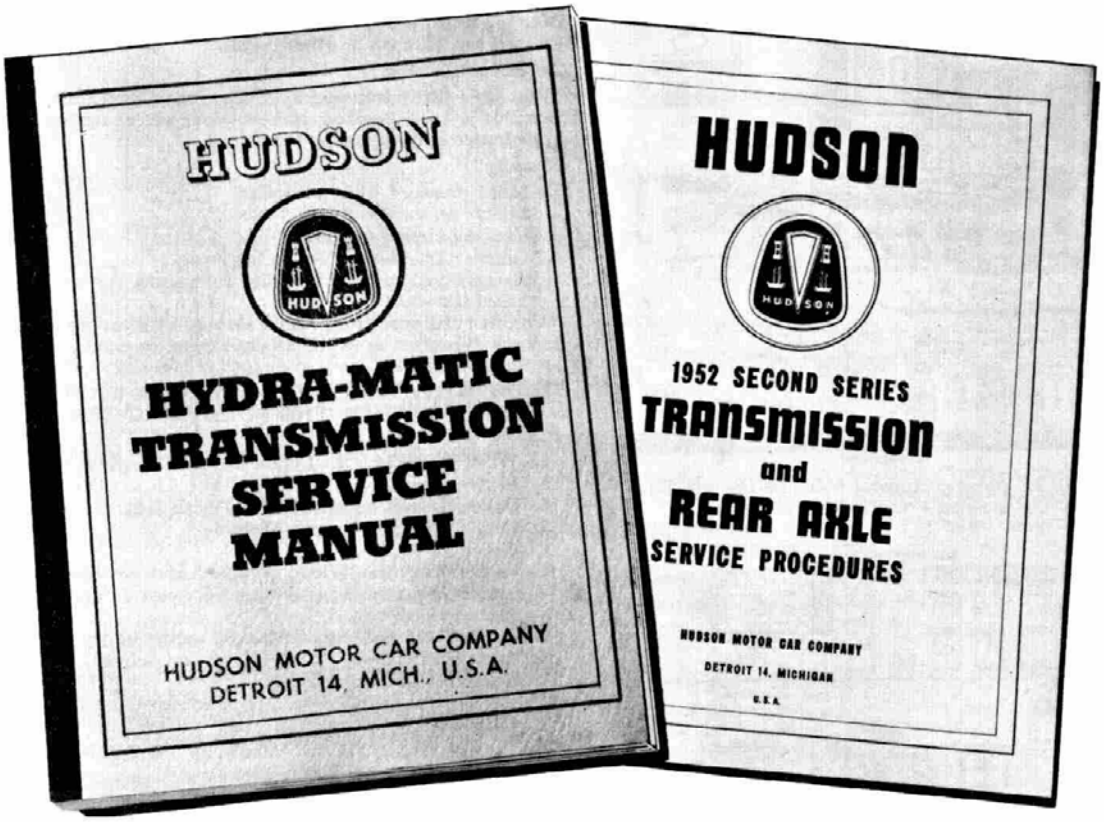

TWO NEW MANUALS

A complete Hydra-Matic Transmission Service Manual and a Service Procedure Treatise of the 1952 Second Series (Manual Shift) Transmission and Rear Axle. More details on Page 328.

HUDSON MOTOR CAR COMPANY..DETROIT 14, MICHIGAN

SERVICE MANAGEMENT

(Continued from July)

The Service Department should be arranged to utilize all available wall space for stall lay-outs. A common aisle should serve the stalls on both sides if possible. The plan below shows a typical floor lay-out of a square building.

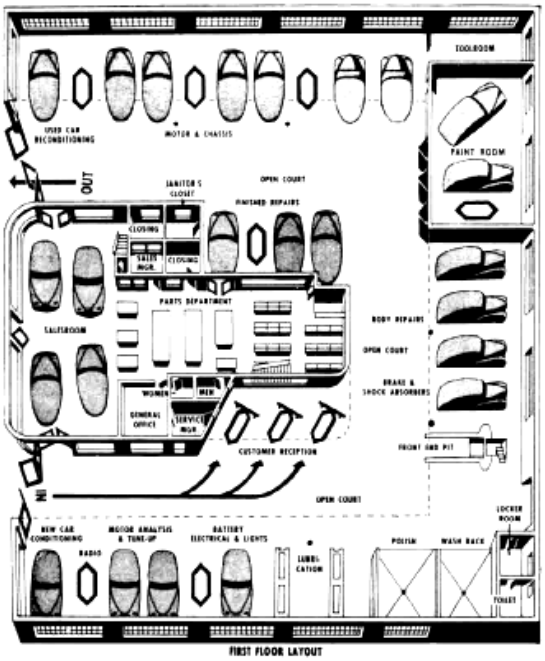

FIRST FLOOR LAYOUT

Next, will be shown a typical L-Shape lay-out. Such buildings are generally utilized on corner lots.

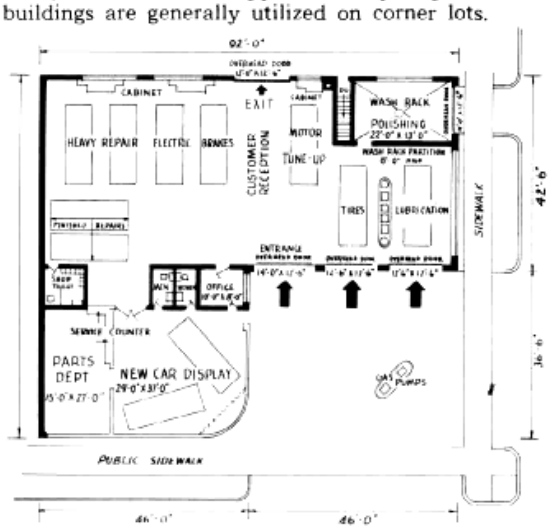

A PROVEN SUCCESSFUL SOLICITATION PLAN

By Karl F. Seiler, Divisional Parts and Service Supervisor

"We are giving you an outline of a special service several dealers have tried and increased parts, accessories and customer labor sales.

"By rendering this service, it provides an opportunity to go over the cars completely four times a year and if done properly, would reveal many needed service operations to the Service Salesman, Lubrication Attendant, or others handling the car. What we are doing is selling *Appearance* and *Conditioning* to the owner.

"The dealer who has the Hudson Approved Reconditioning Program in operation can recondition his used cars from the profits derived from this service. This plan is sold to owners who have just purchased a new or used car, Hudson or other makes.

Letters to Owners:

"You have just purchased a . . . . . car. Congratulations! It is good business to keep your car in tip-top appearance and operating condition.

Results:

1. More pleasure from your Car.
2. Makes an excellent impression.
3. Reduces repair expense.
4. Greater Trade-in value for the owner.
5. Everyone likes to drive a Car that looks like new at all times.

"We offer you exactly as stated above—at a saving—if you will contact us within 15 days from the time you receive this letter.

"FOUR TIMES EACH YEAR (EVERY 90 DAYS) WE WILL RENDER THE FOLLOWING SERVICE TO YOU:

1. Wash your Car. 2. Lubricate Car Complete.
3. Protect the finish of your Car with Liquid Glaze.
4. Polish Wheels and Rims. 5. Polish Dash Board.
6. Polish Window Garnish Molding.
7. Polish all chrome.
8. Polish Rim and Wheel of spare and clean out trunk compartment and dress floor mat if desired by the car owner.
9. Dress Tires and Floor Mats if requested, at no additional charge. 10. Pick up and deliver Car.
11. Road test Car with owner.
12. Render these services on a satisfaction guaranteed basis.

"We believe this to be the MOST for the MONEY that may be obtained in this area.

"We have two payment plans:

ECONOMY PAYMENT PLAN—
SPECIAL CASH PRICE $36.85

BUDGET PAYMENT PLAN—
$41.65
15.65 Down Payment
$26.00 Balance—payments of $5.00 each and final payment of $6.00.

"We also do single jobs of
APPEARANCE and CONDITION automobiles by appointment."

OFFSET REAR SPRING SHACKLES ON MODEL 4-B

Production has, for some time, been using new Rear Spring Shackles on Model 4-B only. These are Part Numbers 307501 and 307502 Right and Left, replacing Part Numbers 161005 and 161006, formerly used on that Model.

Instead of the threaded ends of the new shackle being parallel, they are offset ⅛ of an inch, as shown in the illustration below. It will also be noted that the Right Shackle has a left hand thread on the lower shank. This is indicated by the marking (single rib on back) of the Left Shackle that distinguishes it from the Right one, also the absence of two ribs at top of both that are on the old shackles.

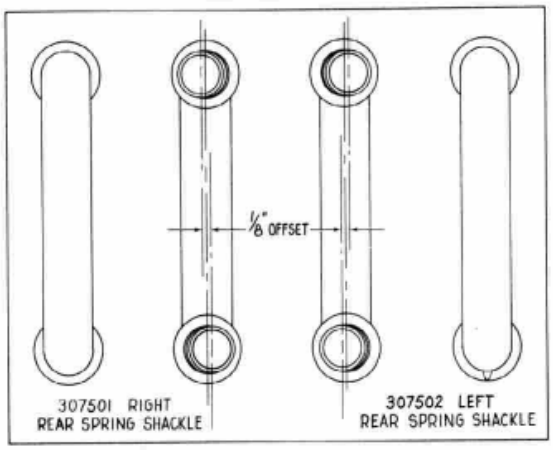

The object of this change in shackle design is to minimize the possibility of shackle noise on models not equipped with rear stabilizer. These rear shackles are to be used on 4-B and may also be used instead of Part Numbers 161005 and 161006 on other models.

THE TWO NEW MANUALS—

shown on the cover are the latest Service publications.

A 196-page manual with over 300 illustrations, covering in detail all Hydra-Matic Transmissions used on Hudson, has recently been mailed out, one copy to each Zone, Distributor and Dealer.

The manual covering the 1952 Second Series (Manual Shift) Transmission and Rear Axle contains 21 pages, illustrating the use of Special Tools and details on assembly, clearances, adjustment, etc.

These manuals should be kept available at all times so that all mechanics may become familiar with their contents. The Hydra-Matic Manual lists at $1.00 per copy, the other one is furnished gratis.

A slaughter house official divorced his wife account of constant nagging—A newspaper headlined the story —PACKER CANS TONGUE.

INCOMPLETELY DRILLED CYLINDER HEADS

In the machining of certain cylinder heads for 6-cylinder engines included in recent parts shipments to the field, drilling of some of the water transfer holes were inadvertently omitted.

The cylinder head assemblies involved were shipped under Part No. 305365 and the improperly machined parts can be readily distinguished from the correct ones by checking the drilling of the water holes as shown in the sketch below.

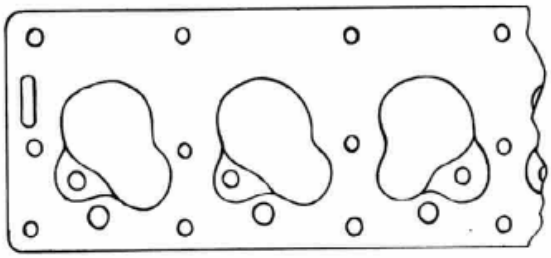

305365 CYLINDER HEAD—WATER HOLES OMITTED

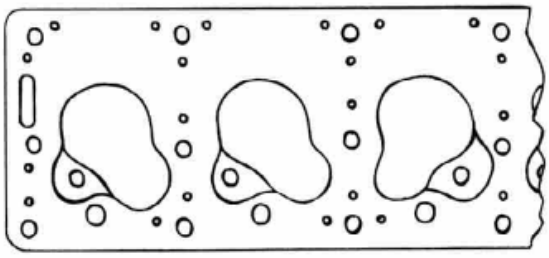

305365 CYLINDER HEAD—WATER HOLES COMPLETELY DRILLED

Since the installation of cylinder heads on which the water holes have been omitted could be responsible for overheating difficulties, it is most important that your Parts Manager check stocks of the subject parts at once and arrange to return those cylinder heads on which the drilling is incomplete.

THE STEERING COLUMN and tube should line up freely to the proper position at the dash bracket. Never spring or force it into place.

Should the Steering Column Bracket at dash be unbolted and the column has a tendency to spring to one side or downward, the Steering Gear Housing to Frame Bolts should be loosened and shims installed between the Frame Member and Steering Gear Housing, as may be necessary to correct the alignment of the tube and column.

KEEP STORAGE BATTERIES CHARGED

Batteries in storage, whether in a car or in a Parts Department, should be recharged monthly or whenever the gravity drops below 1.240 at 80 degrees F. The purpose of this is, of course, to remove the possibility of the soft, soluble sulphate that normally forms on the plates of a battery as it discharges, from becoming hard and insoluble. At the proper rates it will dissolve the soluble sulphate and restore the battery to a healthy condition. The excessively sulphated batteries cannot be restored to a normal charge and are usually worth only their salvage value.

Experience has taught us that batteries that have discharged slowly should be recharged slowly; therefore, batteries that have lost their charge slowly, through their own action, are usually best recharged at a low rate. Batteries, of the average automotive size of about 100 ampere hours, are usually best recharged at about 5 ampere charge rate. Fast charging is generally satisfactory under the following precautions:

(a) That the equipment has terminated the fast charge when the temperature of the battery, in the center cell, reaches 125 degrees F. This is accomplished by the use of a thermostatic control inside the center cell of the battery.

(b) When the battery has been discharged completely quickly so the sulphate is soft and soluble and easily converted to its original components of lead and sulphuric acid.

(c) When the electrical equipment on the car is in proper operating condition so that it may complete a charge at normal rates.

Note—The new lower gravity batteries have 1270 molded in the lead cell connections. See Page 278 February Service Merchandiser.

CHECK CYLINDER HEAD AND GASKET

Many cylinder heads and cylinder head gaskets are so near alike today, that it is a good idea for any mechanic when making installation of these, to first lay the gasket over the face of cylinder head and carefully note that all cored and drilled water holes of both the gasket and head coincide.

When this checks out all right and the gasket is then placed over the face of cylinder block and again all water circulating holes are in exact position, and the gasket edges line up even with the edges of the cylinder bores, it may be assumed that these are the correct parts with respect to fit.

HYDRA-MATIC DRIVE TRANSMISSION T. V. LEVER (OUTER)

Lever bearing Part Number 304311 has been superseded by a new one bearing Part Number 307556, which may be used with all Hydra-Matic Transmissions. The Throttle Rod will be assembled in the outer hole "B" in all cases EXCEPT 5-B and 6-B when these cars are fitted with Twin Carburetors; then Throttle Rod must be assembled in the inner hole "A" shown in illustration below.

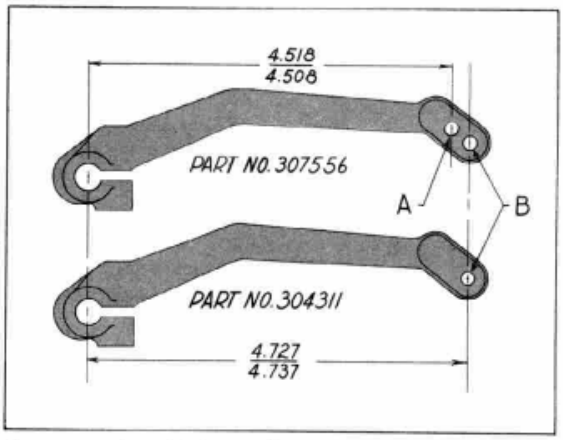

The reason for this is to effect a sychronization of the travel of this lever with the travel of the Throttle Lever on the Carburetors used on these engines.

NEW FRONT COIL SPRINGS—LIGHT SCALE ALL MODELS

Beginning at Car Number 175108, the front coil light scale spring, Part Number 300442 was superseded by new right and left Front Coil Light Scale Springs, Part Numbers 307193 and 307194 respectively.

For identification a daub of colored paint is placed across the two center coils—307193 (Right) WHITE and 307194 (Left) RED. The approximate free heights are 15⅜ inches right and 15¾ inches left.

WINDSHIELD WIPER INSTALLATION

Beginning at Car Number 175199, the position of the Windshield Wiper Mounting is changed from the right to the left side of the dash. The object of this is in order to provide air cleaner clearance for Twin Carburetor installation.

This change in windshield Mounting position involves changes in position of locating holes, Windshield Wiper Pulley Housing and Cable Assembly, Windshield Wiper and Washer Operating Control Assemblies, Windshield Wiper Tubings, etc.

HUDSON TOURISTS and Vacationists naturally seek out the Hudson service station where they know the mechanics are specially trained for servicing Hudson Cars.

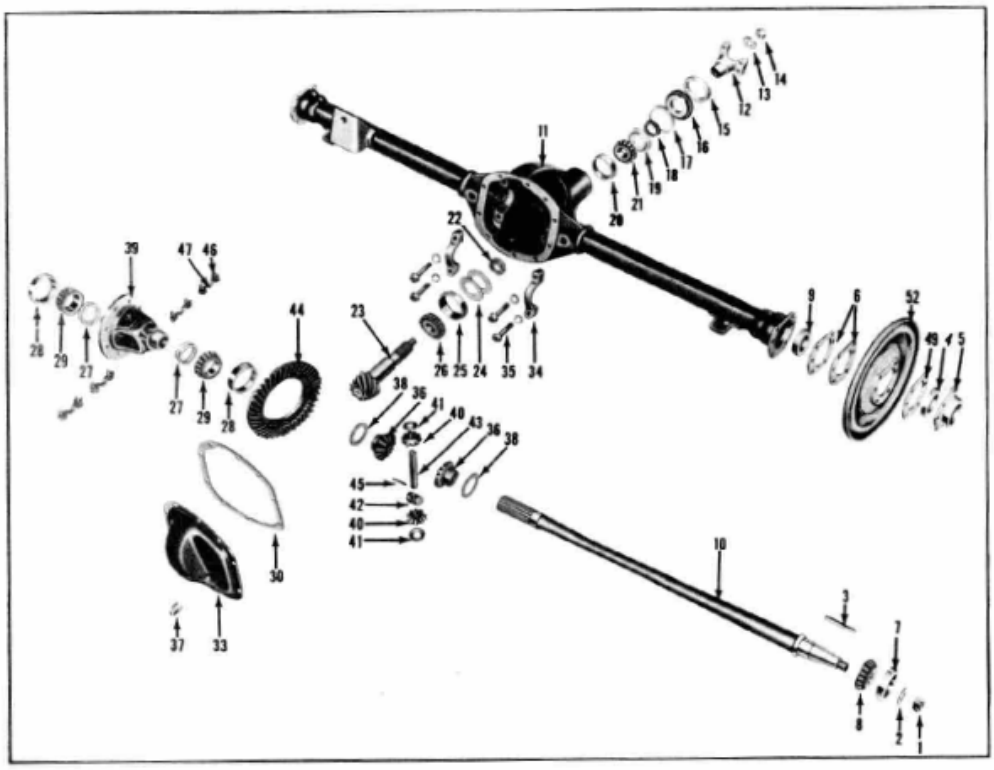

1952 SECOND SERIES REAR AXLE DETAIL OF PARTS—MODEL 44

1. Axle Shaft Nut
2. Axle Shaft Washer
3. Axle Shaft Key
4. Wheel Bearing Adjusting Cap Oil Seal
5. Wheel Bearing Oil Seal Cap
6. Wheel Bearing Adjusting Shims
7. Wheel Bearing Cup
8. Wheel Bearing Cone
9. Wheel Bearing Inner Oil Seal
10. Axle Shaft
11. Carrier and Tube Assembly
12. Companion Flange
13. Drive Pinion Washer
14. Drive Pinion Nut
15. Drive Pinion Dirt Shield
16. Drive Pinion Oil Seal
17. Drive Pinion Oil Seal Gasket
18. Drive Pinion Felt Wick
19. Drive Pinion Oil Slinger
20. Drive Pinion Front Bearing Cup
21. Drive Pinion Front Bearing Cone
22. Drive Pinion Front Bearing Shims
23. Drive Pinion
24. Drive Pinion Rear Bearing Shims
25. Drive Pinion Rear Bearing Cup
26. Drive Pinion Rear Bearing Cone
27. Differential Side Bearing Shim
28. Differential Side Bearing Cup
29. Differential Side Bearing Cone
30. Housing Cover Gasket
31. Housing Cover Bolt Lockwasher
32. Housing Cover Bolt
33. Differential Housing Cover
34. Differential Side Bearing Cap
35. Differential Bearing Cap Bolt
36. Differential Gear
37. Housing Cover Filler Plug
38. Differential Gear Thrust Washer
39. Differential Case
40. Differential Pinion
41. Differential Pinion Thrust Washer
42. Axle Shaft Spacer
43. Dffierential Pinion Shaft
44. Drive Gear
45. Differential Pinion Shaft Locating Pin
46. Drive Gear Bolts
47. Drive Gear Bolt Lock
48. Wheel Bearing Grease Hole Plug
49. Wheel Bearing Oil Seal Cap Gasket
50. Wheel Bearing Adjusting Cap Bolt
51. Wheel Bearing Adjusting Cap Nut
52. Brake Backing Plate

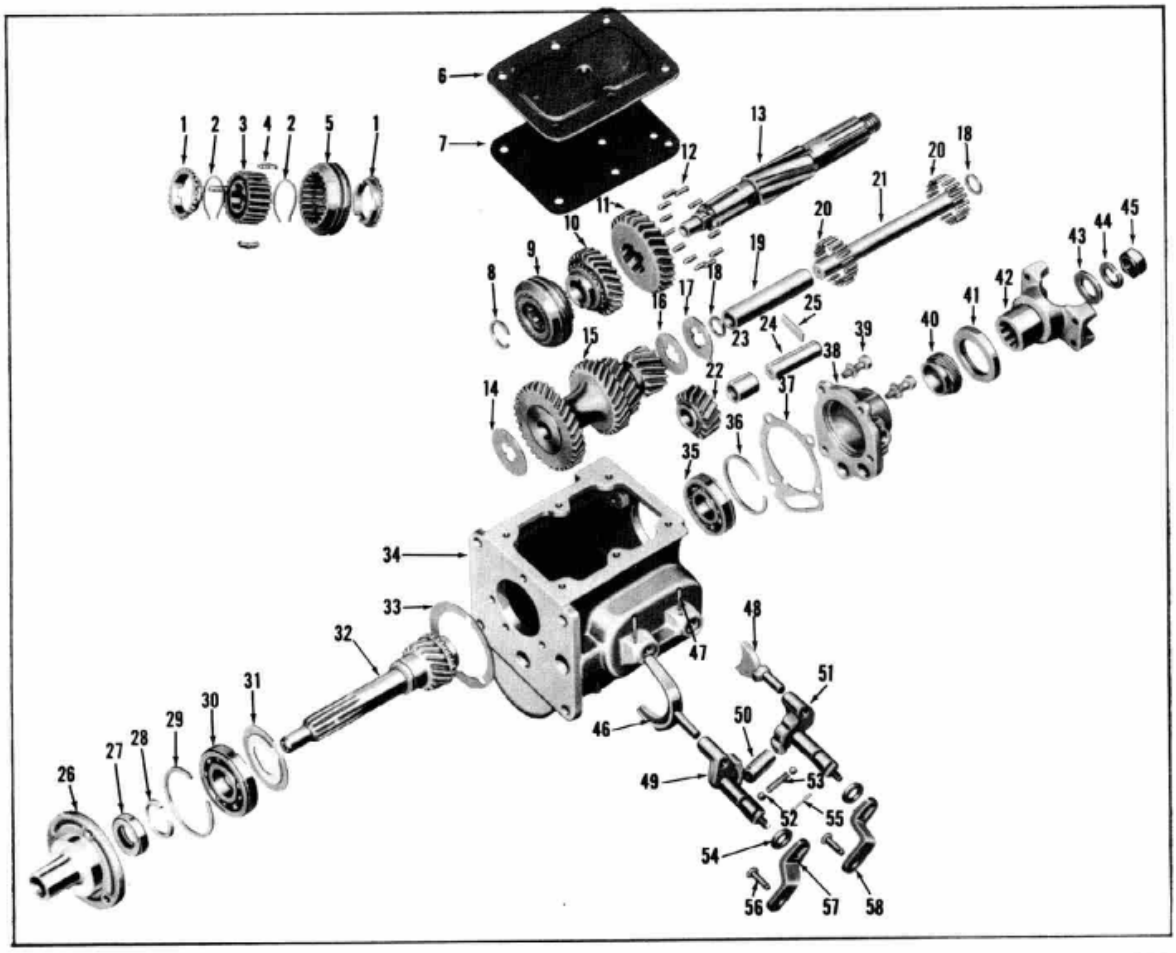

EXPOSED VIEW OF THE 1952 SECOND SERIES HUDSON MANUAL SHIFT TRANSMISSION

1. Synchronizer Rings
2. Synchronizer Springs
3. Synchronizer Hub
4. Synchronizer Shift Plates
5. Synchronizer Sleeve
6. Cover
7. Cover Gasket
8. Mainshaft Snap Ring
9. Synchronizer Assembly
10. Second Speed Gear and Bushing
11. Low and Reverse Gear
12. Mainshaft Front Rollers
13. Mainshaft
14. C. S. Thrust Washer (Front)
15. C. S. Gear Cluster
16. C. S. Rear Thrust Washer (Inner)
17. C. S. Rear Thrust Washer (Outer)
18. C. S. Bearing Washers
19. C. S. Gear Spacer
20. C. S. Bearing Rollers
21. Countershaft
22. Reverse Idler Gear
23. Reverse Idler Gear Bushing
24. Reverse Idler Gear Shaft
25. Idler and C. S. Lock Plate
26. Main Drive Gear Bearing Retainer
27. Main Drive Gear Oil Seal
28. Main Drive Gear Snap Ring
29. Main Drive Gear Bearing Snap Ring
30. Main Drive Gear Bearing
31. Main Drive Gear Oil Retaining Washer
32. Main Drive Gear
33. Main Drive Gear Bearing Retainer Gasket
34. Transmission Case
35. Mainshaft Bearing (Rear)
36. Mainshaft Bearing Snap Ring
37. Mainshaft Rear Bearing Retainer Gasket
38. Mainshaft Rear Bearing Retainer
39. Retainer Bolts
40. Speedometer Drive Gear
41. Mainshaft Oil Seal
42. Companion Flange
43. Mainshaft Plain Washer
44. Mainshaft Lock Washer
45. Mainshaft Nut
46. Shift Fork (Second and High)
47. Taper Pin
48. Shift Shoe (Low and Reverse)
49. Shift Shaft (Second and High)
50. Shift Lever Interlock Sleeve
51. Shift Shaft (Low and Reverse)
52. Shift Rail Lock Ball
53. Shift Rail Lock Ball Spring
54. Shift Shaft Oil Seals
55. Shift Lever Interlock Pin
56. Control Lever Outer Clevis Pin
57. Second and High Control Lever (Outer)
58. Low and Reverse Control Lever (Outer)

Following are the answers to questions that appeared in the July issue.

1. Five units of the Vacumotive Drive are: Power Unit, Accelerator Switch, Governor Switch, Shift Rail Switch and Instrument Panel Switch.
2. False. Binding or sticking condition of the power unit linkage interferes with the application of the clutch.
3. True. The clutch in itself must be in good mechanical condition to function properly.
4. The function of the throttle switch is to prevent gear clashing even though engine is accelerated during the shift interval.
5. The governor switch prevents automatic disengagement of the clutch at speeds of 16 to 21 M.P.H.
6. The dash switch permits of manual operation in low, second and reverse gears.
7. True. Rail switch points are closed only in high gear.
8. False. Governor switch controls clutch only in high and second gear operation.
9. False. A grounded shift rail switch will cause clutch to release in second gear only.
10. False. It is important that accelerator linkage be free and responsive for best clutch action.

Answers to the following questions will appear in the September issue of Service Merchandiser.
(Hudson-Built Rear Axle)

1. The differential bearing adjusting bearing adjusting nut is tightened one notch tighter to provide proper preload of differential bearings. True or false? _____
2. Carrier legs are "spread" under preload to a spread of:
   false? _____
   (a) .004" to .006" (c) .008" to .012"
   (b) .006" to .008"
3. Gears are lapped after heat treating to provide:
   (a) Correct backlash.
   (b) Correct tooth contact.
   (c) Smooth finished gear tooth surfaces.
4. Hypoid gears are never sold as matched sets. True or false? _____
5. New axle shafts must be installed when shaft thrust buttons become worn. True or false? _____
6. Increased pinion gear teeth pressures result from improper gear tooth contact adjustment. True or false? _____
7. Why is the rear axle housing ventilated?
8. What is the most likely cause of a noise on drive or coast after the axle having been quiet for some time?
9. What important clearance should be carefully checked after installing a new drive gear?
10. Are differential carrier housings marked indicating the gear ratio?

INSTALLATION OF FLYWHEEL HOUSING TO HYDRA-MATIC TRANSMISSION

There have been cases where the Hydra-Matic front pump was severely damaged by improper assembly of the Flywheel Housing to the Transmission. This was caused by forcing the housing onto the pump pilot with the bolts which hold the housing instead of placing it in position before drawing the bolts up.

In order to prevent possible damage to the Transmission Front Pump, or interfering with its proper operation, it is essential that the following precautions be taken when there is occasion to install a new unit in the field:

(1) The housing must be placed into position by hand—tight up against the front face of the Transmission Case, BEFORE the bolts which hold it to the Case are tightened. The housing MUST NOT be pulled onto the pump pilot with the bolts.

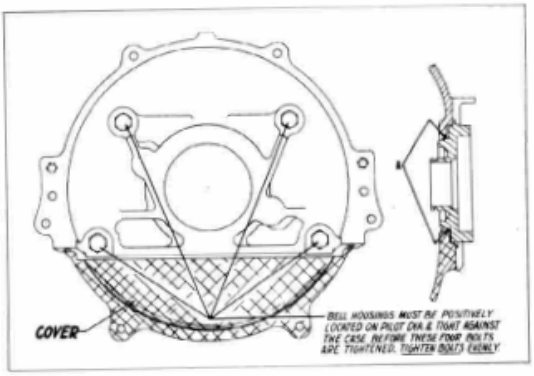

(2) The four bolts shown in the sketch above MUST be tightened evenly after bell housing pilots freely on step shown at "A".

DO NOT NEGLECT THOSE AIR CLEANERS

Carburetor Air Cleaners play an all important part in keeping dirt and grit out of the upper engine and crankcase and prolonging the life of an engine. It is during these hot and dusty Summer months when car mileage is greatest that the Air Cleaner's function is at maximum.

An Air Cleaner that is neglected until it becomes dry and loaded with grit, is not only greatly reducing gasoline mileage and car performance, but worse still, is permitting much grit and dust to pass into the engine resulting in rapid wear.

Here is a service requirement on all motor cars and like many others that the average owner is not fully aware of the importance and possible danger if neglected. Particularly in dusty areas, it is just as important to clean those Carburetor Air Cleaners and Crankcase Breather Cleaners at timely intervals as it is to change oil.

Air Cleaner servicing, like the importance of changing fan belts before failure or changing radiator hose that may be restricting the flow of water, is just about 100% Service Salesmanship.

Only Hudson Dealers have this

FOUR-POINT POWER PROGRAM

to offer owners and wholesale customers!

1

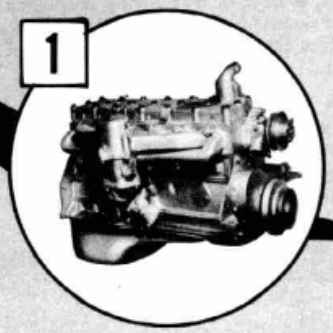

Everyone wants power . . . all the power their car can deliver. But power wears out. At some time, during its lifetime, every car must be repowered.

That's where you, as a Hudson Dealer, have the big advantage. With your exclusive FOUR-POINT POWER PROGRAM, you can supply just the power-package the car owner or wholesale customer wants:

2

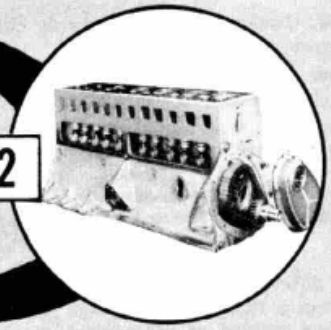

1. *A complete new engine*
2. *A skeleton new engine*
3. *A cylinder-pistons-rings assembly*
4. *All parts for complete engine overhaul*

3

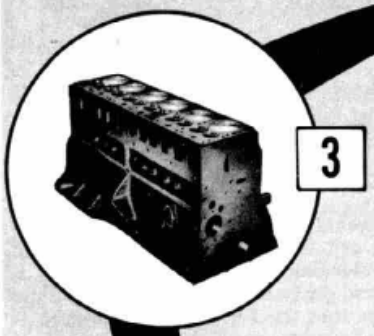

Any one of these power packages will give the car owner the results he wants: top performance, economy and dependability.

That's why putting new power in cars is big business. It can mean big volume and big profits for you if you go after it. All you have to do is display and talk your FOUR-POINT POWER PROGRAM to your parts and service customers.

Hudson Dealers are the exclusive source of genuine Hudson parts and accessories to car owners and wholesale customers. Make this business your business.

PROFITABLE TO DISPLAY ENGINE

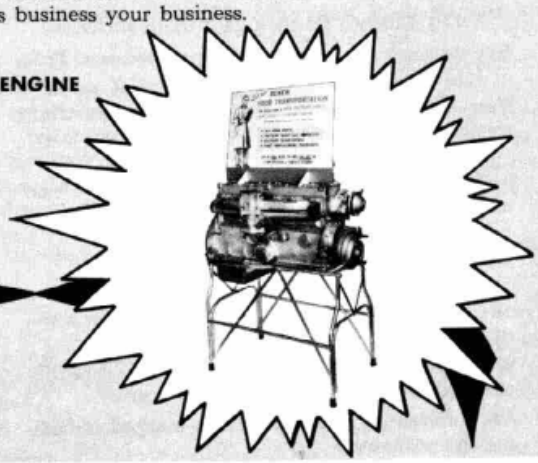

4