SERVICE

A MONTHLY MAGAZINE

ON SERVICE • PARTS • ACCESSORIES
AND TECHNICAL MATTERS

Issue 1 **January-February-March** **1945 Series**

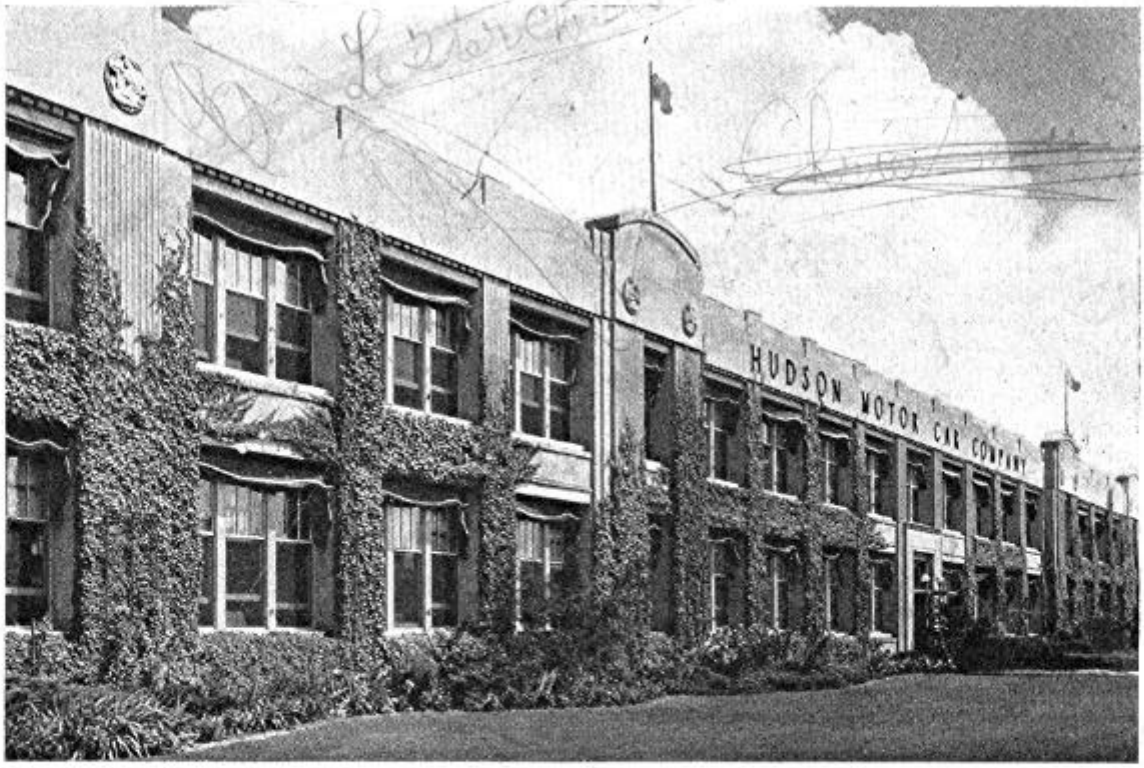

HUDSON MOTOR CAR CO. DETROIT, MICH., U. S. A.

PRINTED IN U.S.A.

The Nation-wide Brake Emphasis Program

A Worth-while Safety Measure Conducted by the Police of the Nation

Hundreds of Automobiles are leaving the highway every day, headed for the scrap heap, and this despite wartime restrictions placed on gasoline and tires. The reason is that cars are wearing out, or are being damaged beyond repair in traffic accidents.

Traffic accidents are one of the leading causes of death in this country. In the last twenty-five years they have taken the lives of more than three-quarters of a million people, they have crippled many others, and have been responsible for economic losses which run into billions of dollars. In 1944 alone about 23,400 persons were killed in the United States in traffic accidents, 850,000 persons were injured, and of these 70,000 were permanently disabled.

The United States entered the war with the finest highway transportation system in the world—good roads everywhere, and the cars to travel on them—and this is one of the major elements in our successful prosecution of the war thus far. War plants could be established at strategic locations; workers could be shifted. Civilians could travel long distances to work, and trucks and buses could carry huge quantities of war material.

Germany's deficiency in this respect is contributing in a great degree to her ultimate defeat. She had the highways, which handled vast volumes of military truck traffic. But these were of little avail for moving working people from place to place, because of the lack of passenger automobiles. Hitler's Volkswagen program was not a success—the cars weren't much good, and the people didn't have the money to buy them.

Truly, America's cars, designed for peace time pursuits, are today weapons of war. But the supply of cars is dwindling. They are wearing out, and they are being wrecked in traffic accidents. Extraordinary wear due to constant use demands extraordinary attention to maintenance—correcting the small things before they develop into major repairs. Accident prevention hinges to a great extent on the same thing.

The condition of the vehicle enters directly into the matter of traffic accidents. Today, with the average age of cars nearly twice what it was in pre-war days, it assumes a contributing cause not only to the frequency of automobile accidents, but to their severity. Brakes that fail to hold at the critical moment, steering gear failures, blow-outs, faulty lights—all these help to swell the accident total.

The Program

To avert a threatened increase in motor vehicle accidents, and to conserve the diminishing supply of cars, the International Association of Chiefs of Police have developed and will carry out a Nation-wide Brake Emphasis Program. The program will begin April 15 and conclude June 1, 1945, thus covering a seasonal period when sharp increases in traffic accidents are usually experienced. Each state will have its own organization for conducting the program, and it will be operated in local communities by Chiefs of Police and Sheriffs.

The Police of the Nation have the enthusiastic support in the program of the American Association of State Highway Officials, the Office of Defense Transportation, the National Safety Council, American Automobile Association, National Conservation Bureau, and many other National and local safety and public service organizations.

There has already been considerable publicity in connection with the program, and this will increase to reach its full force throughout the six-week period from April 15 to June 1. A greater volume of publicity through press, radio, magazines, advertising, posters and leaflets has been scheduled for the Brake Emphasis Program than has ever before supported police traffic activities. Thus owners will be forcefully reminded of the importance of brakes in traffic safety.

The Brake Check

Police will apply the brake check only to passenger cars which are involved in accidents or moving traffic violations, or to cars observed being operated in a manner indicating faulty brakes. On these cars the officer applies the brake check, which consists of depressing the brake pedal to determine the distance between the pedal and the floorboard when the brakes begin to grip. If this distance is one inch or less, the brakes are inadequate and may be dangerous.

This brake check is not a test, since it does not test the brakes. It is a wartime enforcement device, worked out with the assistance of the Society of Automotive Engineers whereby brakes too dangerous for use can be detected. The objective of the check is not to make arrests or collect fines; but rather to encourage all motorists to maintain brakes in safe condition. To this end, police officers will hand a leaflet to each motorist whose brakes are checked and to every other motorist with whom they have contact. Drivers whose brakes are found to be inadequate as a result of the check will be told to have them repaired.

This activity will naturally increase the brake maintenance work which repair shops will be called upon to take care of. For the period for which the Brake Program is in effect, service stations are asked to give preference to this kind of work, although it is recognized that manpower and material shortages may be a determining influence in some cases.

Check Your Facilities

Months ago, when plans for the Brake Program were getting under way, manufacturers of brake replacement parts were urged to make a special effort to clear up their back orders so that material would be available for the increased number of brake repair jobs which would follow as a result of the Program. While this could not be accomplished 100%, we believe that the supply of brake fluid and other material needed in ordinary maintenance will be adequate.

In a bulletin issued February 16, we called your attention to the importance of checking your shop

Continued on page 5

Suggestions on Brake Maintenance

Description of Hudson Hydraulic Brake System and a Few Pointers on Trouble Shooting

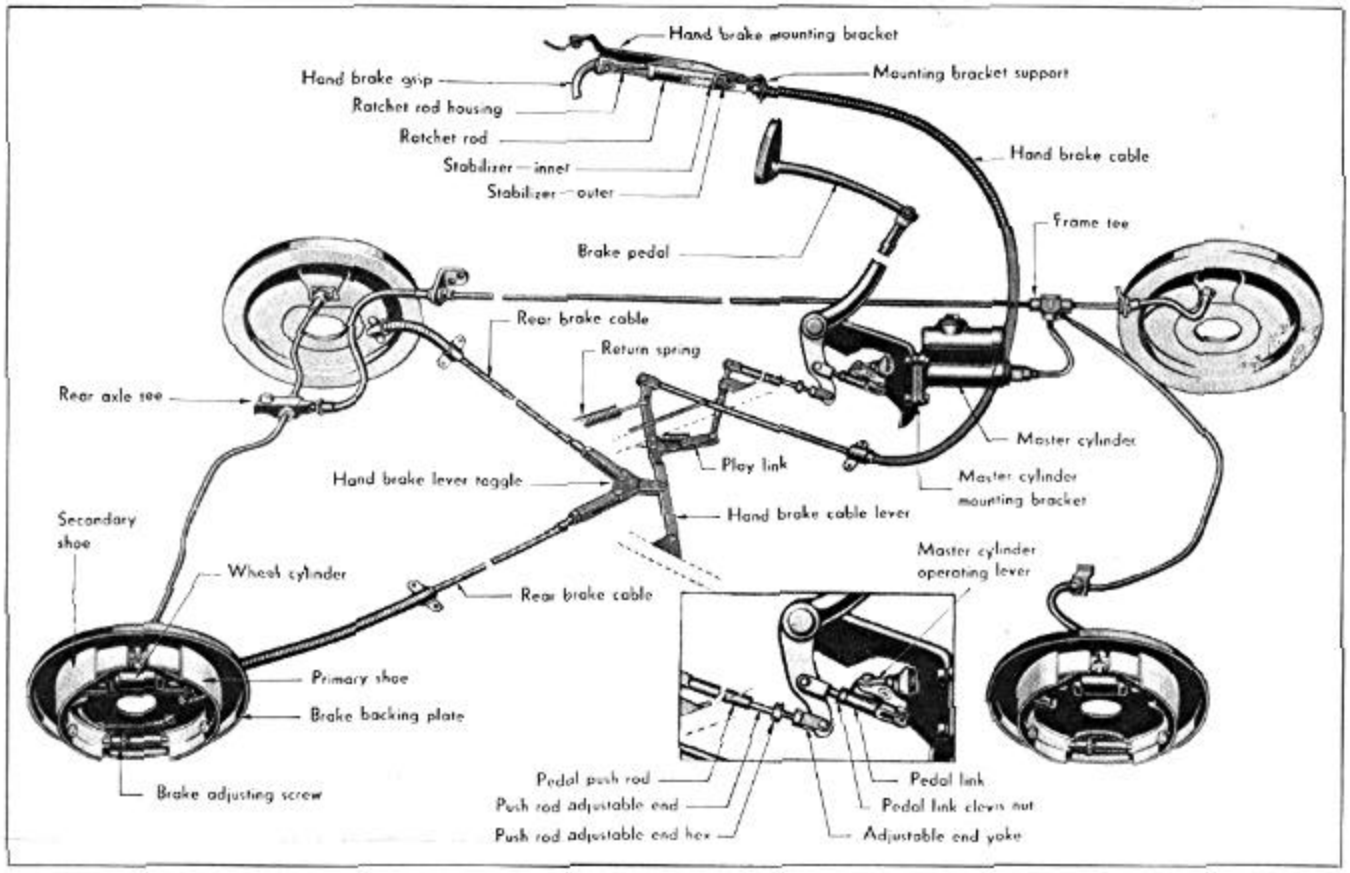

Figure 1—Hudson Brake System

Brake equipment of 1940-1941-1942 Hudson models is the 4 wheel Bendix Hydraulic, including a master cylinder operated by an adjustable link from the brake pedal, four double piston wheel cylinders mounted on the brake backing plates, and all connecting tubing. Depressing the brake pedal forces fluid out of the master cylinder into the wheel cylinders where it separates the pistons and applies the brakes. When the brake pedal is allowed to return to its normal position the brake shoe springs return the wheel cylinder pistons to their normal position and the fluid is driven back into the master cylinder.

Mechanical Brake System on Rear Wheels

The rear wheel brakes are connected for mechanical emergency operation by cable and conduit connections to the hand brake; also to the foot pedal through a sliding link.

Should the hydraulic system become inoperative for any reason, continued pressure on the foot brake pedal causes the pedal push rod adjustable end nut shown in Fig. 1 to contact the front face of pedal push rod. The push rod adjustable end is a sliding fit in the push rod.

Mechanical braking power is transmitted through the push rod to the cable lever, and finally through cables to the rear brake shoes.

Single Anchor Shoes

All models except 40P and 40T use the single anchor, two shoe, duo servo action brake. The two shoes are marked "P" for primary and "S" for secondary or rear.

Regardless of the position in which the brake assembly is mounted, the primary shoe (2, Fig. 2) is always "ahead" of the anchor (1) in the direction of the forward rotation of the drum, and transmits servo action to the secondary shoe (4) through the adjusting screw (8) during a forward braking application.

In reverse, the opposite brake application takes place.

Floating Type Shoes

The 1940 Model 40 Hudson employs the floating type, double anchor shoes. The upper ends of both primary and secondary shoes rest against the wheel cylinder pistons without links between them as shown at (B—Fig. 3).

The floating anchors consist of short forged steel links (D) and (E), which are pivoted on the backing plates at one end (F) and operate in slots (G) in the shoe webs at the other end.

In the forward motion the wheel cylinder piston pushes the primary shoe out against the drum. Rotation of the drum forces the primary shoe against the adjusting screw (A), which transmits the pressure to the bottom of the secondary shoe. The reaction is carried to the anchor link (E) acting against the end of its slot (G) as an anchor.

Braking action in reverse rotation is in exactly the opposite operation, link (D) becoming the anchor as link (E) swings free. Only one anchor acts in each direction of rotation.

The shoes and anchors are free to swing within the limits of lining to drum clearance maintained by the eccentric adjustments (H). This allows the complete shoe assembly to move with, and adjust itself to, the contour of the drum.

Continued on page 6

Batteries Must Be Saved

Conservation Needed to Prevent Break-down of Civilian Passenger Car Transportation

That the national shortage of automotive batteries threatens to become worse instead of better has been brought to the attention of the War Production Board and War Manpower Commission by the Mead Senate Committee investigating the National Defense Program. The Committee asked that steps be taken to correct the lead shortage, which seems to be the bottleneck to battery production.

Unless a larger amount of lead is made available for civilian storage batteries before the end of 1945, it is estimated that the shortage of batteries for civilians will reach a total of 3½ to 8 million, which is a lot of batteries. If each one of this total represents a car which is put off the road for lack of a battery, service stations are going to lose a great deal of potential business.

The situation as it affects passenger cars is made more serious by a recent directive issued by WPB, which makes it compulsory for battery manufacturers, starting April 1st, to apportion their production of civilian replacement batteries so as to fill all orders for replacement batteries for trucks and other commercial vehicles up to the 1944 production of these types of batteries. This means that passenger car requirements cannot be met unless those requirements are much smaller than anticipated. It is evident that a rigid conservation program is the only thing that will prevent countless cars from going out of service. In their own interests, Distributors, Dealers and Service Stations should do everything possible to conserve the life of batteries, and they should get the story to their customers so that all will realize the importance of preventive maintenance by means of regular check-ups.

The following program for battery conservation is suggested by recommendations made by the American Automobile Association and leading battery manufacturers:

1. Check the battery regularly, particularly to see if it is properly charged. The hydrometer reading should be taken before adding water. If the reading is 1.225 or below, the battery should be immediately recharged. Most "A" card holders do not do sufficient driving to keep the battery up, and this calls for an occasional booster charge from an outside source.
2. The liquid level should be kept above the tops of the separators. Distilled water is best—if not available it is important to avoid the use of water with a strong alkaline, iron or other metallic content. Never use battery "dopes" or patented compounds, as no satisfactory substitute has yet been found for the simple mixture of sulphuric acid in water.
3. See that the battery is properly tightened in its holder. Looseness may permit bouncing which will crack the battery case, or do severe damage to the plates by causing the active material in the grids to drop out. Excessive tightening of the hold-down bolts should, of course, be avoided.
4. Keep the top of the battery clean to prevent inter-cell discharge. Cleaning can be done with ammonia or baking soda in water.
5. Check cables and connections for tightness, corrosion and wear. Corrosion can be prevented by applying a liberal amount of vaseline. Connections encrusted with corrosion may be cleaned with a solution of washing soda and a fiber brush. Always turn off the ignition before washing battery terminals, and do not use a metal brush. Worn cables should be replaced.
6. Be sure that the voltage regulator and generator charging rates are correctly adjusted to provide adequate charging current to the battery. But avoid overcharging—a too high generator rate burns up the plates and separators, and violent gassing forces the active material from the plates. High battery temperature and excessive water consumption indicate overcharging.
7. Examine the battery for cracked container, broken covers or cracks in sealing compound. When such defects are found, the battery should be removed and repaired.
8. See that electrical units and wiring are in good condition, to guard against "shorts" which may discharge the battery. Be sure that the charge indicator on the instrument panel is operating. If the car is equipped with an Automatic Battery Filler, see that it is in good condition, and filled with water.
9. Never install a new battery until the old battery is worn out. x x x

Improves On Our Suggestion

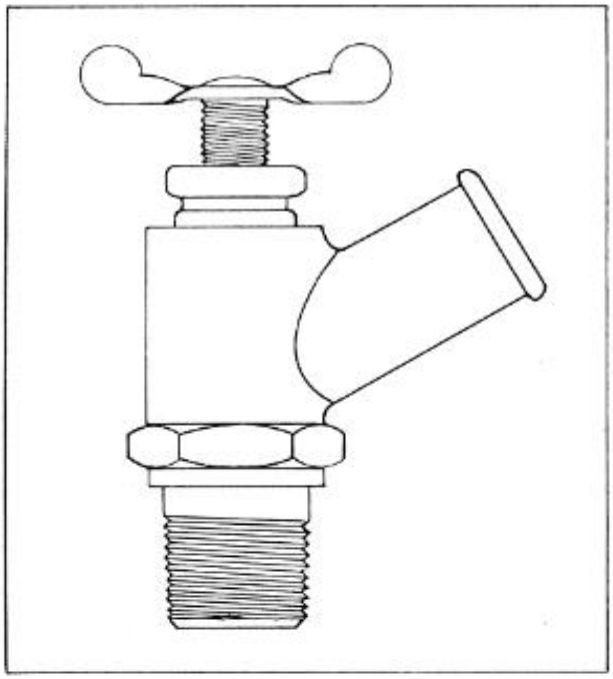

BO 157818 Shut-off Valve

In the article "Take Care of Your Weather-Master" in a previous issue of Service, it was stated that the Shut-off Valve—BO 161442—was no longer available. The suggestion was made that in cases where this valve is damaged or is not suitable for further use, it could be replaced with a ⅜" pipe nipple for winter operation, and a ⅜" pipe plug for summer.

Mr. L. N. Cilley, Parts Manager for The Henley-Kimball Company, Hudson Distributor at Bangor, Maine, thinks a better procedure is the use of Shut-off Valve BO 157818, pictured above, as a substitute for BO 161442 when the latter is not available. This will allow circulation through the heater to be cut off during warm weather without the necessity of changing fittings.

Important Meeting in Detroit

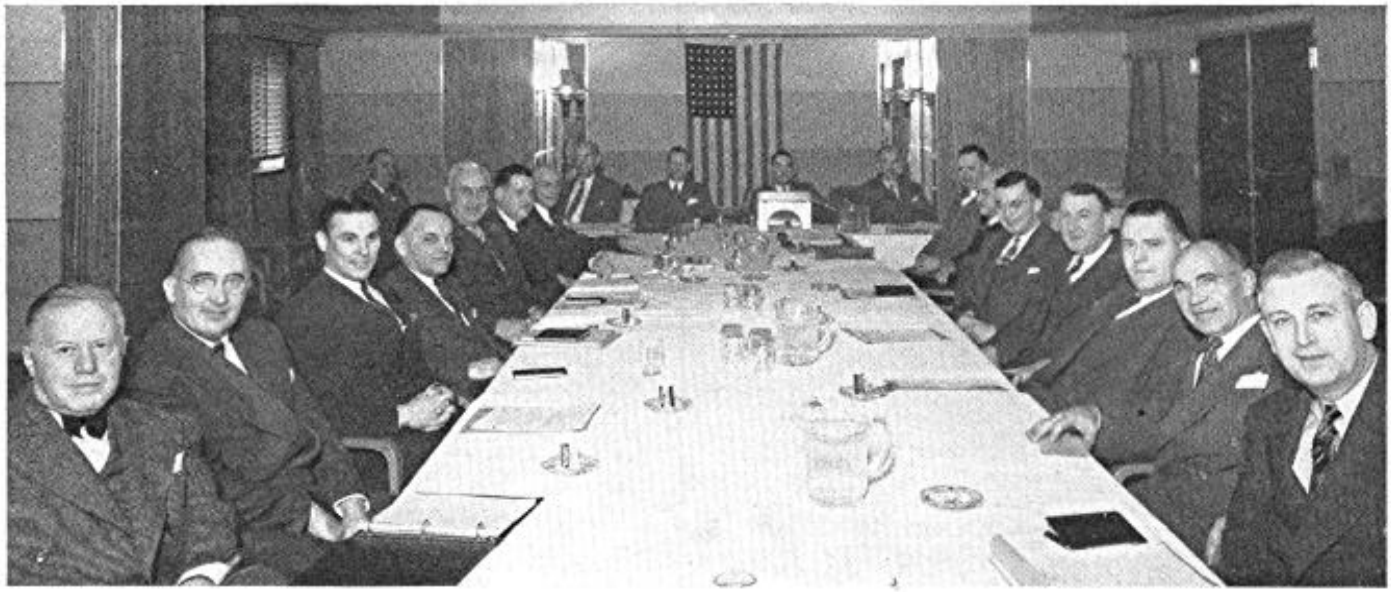

Service problems encountered in all sections of the country were subjects of discussion at the February meeting of Hudson Regional Service Supervisors and Central Office personnel. Presided over by T. H. Stambaugh, Director of National Service Operations, this important pre-Spring meeting was given a good start with instructive talks by G. H. Pratt, General Sales Manager, and M. M. Roberts, Adv. and Merchandising Manager.

With maintenance of essential civilian transportation as its theme, a very interesting and profitable three-day session was given over to such pertinent subjects as parts inventories, the manpower situation, service tool equipment, transportation conditions and recent government regulations. x x x

Handy Table

Installation of seat covers calls for a clean place to work, particularly a clean bench. This is not always easy to find at the right time and place. As a result, the work is delayed, or it is carried on under unfavorable conditions.

Alling & Miles, Inc., Hudson distributor at Rochester, N. Y., solved the problem by purchasing a folding work table of the type sometimes used by wall paper hangers. This portable table, which is about six feet long and two feet wide, has proved ideal for the purpose, as it is quickly set up alongside the car, and when not in use folds up compactly for storage in the stock room until again needed. x x x

Nation-Wide Program—*Continued from page 2*

facilities and parts inventories. These inventories should include not only a supply of brake material, but of other parts as well, as undoubtedly many of those cars which come in for brake work will be prospects for other repairs which will contribute to safe operation.

The probable results in the way of accident prevention to be achieved by the Brake Program when carried out on a Nation-wide basis may be anticipated from the results of a similar campaign conducted in Michigan during the spring of 1944. In that state alone 66 lives were saved, 1188 serious injuries were prevented, and 3630 property damage accidents were prevented. Unsafe brakes dropped from one out of seven at the beginning to one out of 23 at the end of the program.

With this evidence, we do not doubt that Distributors, Dealers and Service Stations will cooperate in making the National Program a success, by displaying the posters which are being sent to them, by passing out the leaflets to customers and owners, and by being prepared to handle brake jobs to the best of their ability. x x x

From Service to Service

Between them, L. H. Strong Motor Company and Peterson Motor Company, Hudson Distributors at Salt Lake City, Utah and Boise, Idaho, respectively, could muster a pretty fair Army and Navy task force.

Here are some of the men, formerly connected with these two companies, who are now with the Armed Forces:

SALT LAKE CITY, Don Van Dorn, Sam Barber, Johnny Davis, Mike Lloyd, Richard Strong, Crandall Dunn, Fred Bradshaw, Paul Hansen

BOISE, Claude Woodward, Gordon Stauffer, Earl Turner, James Bradshaw, Dean McBride, Jake Ellis, Alfred Jonasson, Pat Crutchley, Wayne Graber.

New Distributors

We welcome to Service Magazine mailing list the following accounts, who during the last six months have been added to the growing list of Hudson Distributors:

Jefferson Motor Car Company, Beaumont, Texas
J. C. Bednar Motors, Inc., Bridgeport, Conn.
Copley-Mullins, Inc., Charleston, W. Va.
Conlan Hudson Company, Dubuque, Iowa
C. O. Birkland Motor Company, Erie, Pa.
Johnson Auto Company, Hartford, Conn.
Alderman Motor Co., Inc, Jacksonville, Fla.
Hudson Miami Motors, Miami, Fla.
Elliott-Reynolds Motor Company, Nashville, Tenn.
Carlson Sales Company, Rockford, Ill.
Schlottman Motor Company, Sioux City, Iowa
Claude Wilson Motors, Springfield, Ill.
Moore's Auto Exchange, Inc., Terre Haute, Ind.
Howard F. Newlove, Utica, N. Y.
Moody-Wilcox Motor Company, Waterbury, Conn.
Hudson Sales & Service Co., Inc., Watertown, So. Dak.

Suggestions on Brake Maintenance

Continued from page 3

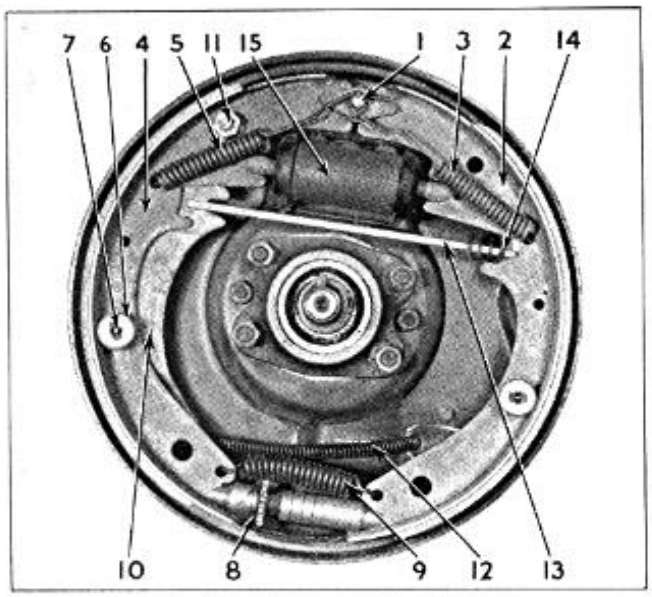

Figure 2—Single Anchor Brake

Hand Brake

HAND BRAKING is through a pull type, pistol grip, self-locking hand control located under the instrument panel to the left of the steering column. See Fig. 4.

The hand brake can be applied much more easily by depressing the brake pedal in the ordinary way and at the same time pulling upward on the hand brake lever. The load on the hand brake cables, in expanding the shoes against the brake drums, is relieved; and the possibility of a vacuum being created in the rear wheel cylinders is eliminated. This might draw air into the hydraulic system past the rubber cups behind the pistons as the shoes are manually expanded.

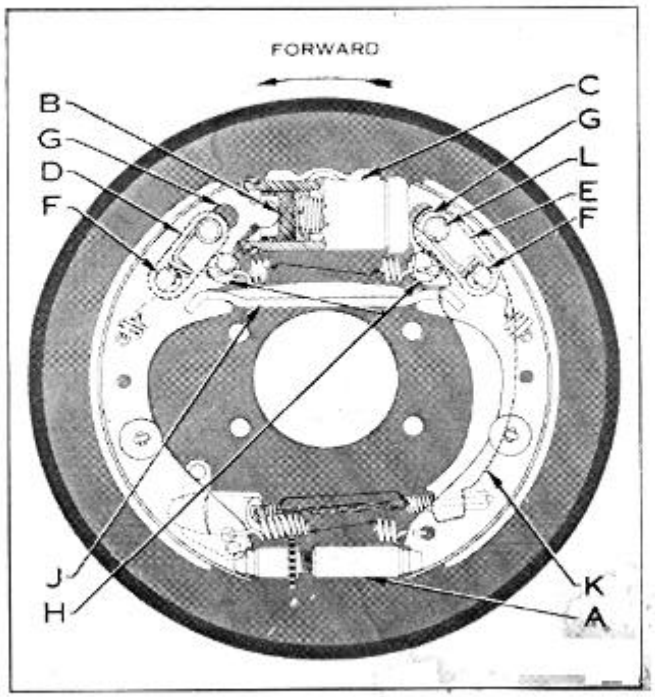

Figure 3--Double Anchor Brake

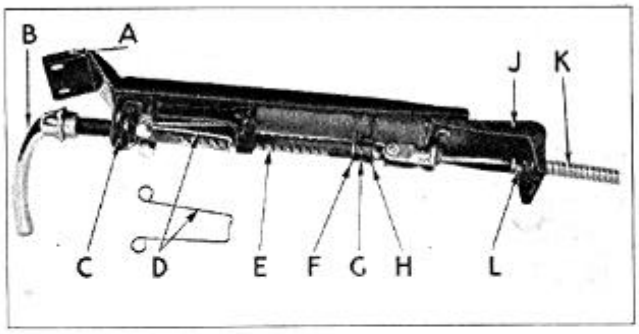

Figure 4—Hand Brake

Master Cylinder

THE BRAKE MASTER CYLINDER (Fig. 5) is a combined supply tank and master cylinder. It maintains a constant volume of fluid in the system at all times, regardless of temperature conditions which cause expansion or contraction. It acts as a pump during bleeding operations.

When the brake pedal, after being applied, is released quickly, the piston (2, Fig. 5) is returned to a released position much faster than the fluid returns from the lines back into the master cylinder.

A momentary vacuum will exist in the cylinder barrel, and additional fluid is drawn into the system from the reservoir through drilled holes in the piston (2) and past the lip of the cup (4).

The brake shoe retracting springs exert a pressure on the fluid sufficiently strong to lift valve (16) off its seat and permit fluid from the lines to return to the master cylinder. Excess fluid is returned by port (3) into the reservoir, filling the cylinder for the next brake application.

It is necessary that rod (1) which is attached to the brake pedal operating rod, be adjusted for clearance where it seats in piston (2) so that there is ¼" free movement of the brake pedal pad before the pressure stroke starts.

Cup (4) is thus permitted to be clear of port (3) when piston (2) is in its released position. If this port is not cleared by the piston, the compensating action of the master cylinder will be destroyed and the brakes will drag.

Secondary cup (5) prevents fluid from leaking out of master cylinder into boot (7). Supply tank filler cap (11) is located under the left side of the bonnet for checking the level of the fluid. The boot breather hole (6) should be kept open, free of dirt.

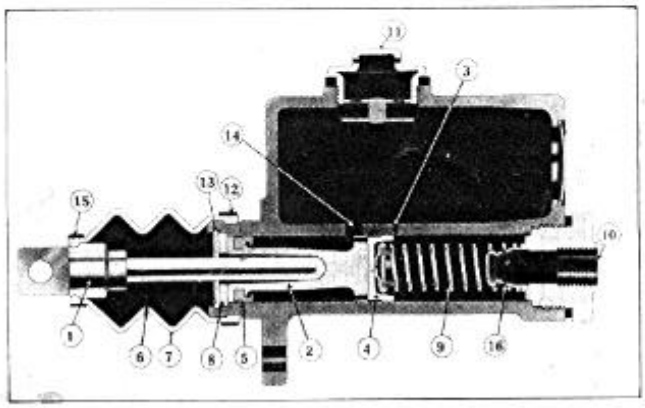

Figure 5—Master Cylinder

The master cylinder should be kept at least one half full of Hudson Hydraulic Brake Fluid. The filler cap and master cylinder should always be cleaned of all dirt and grit before removing the cap. Grit in the fluid will cause scoring of the cylinders and possible plugging of lines and ports.

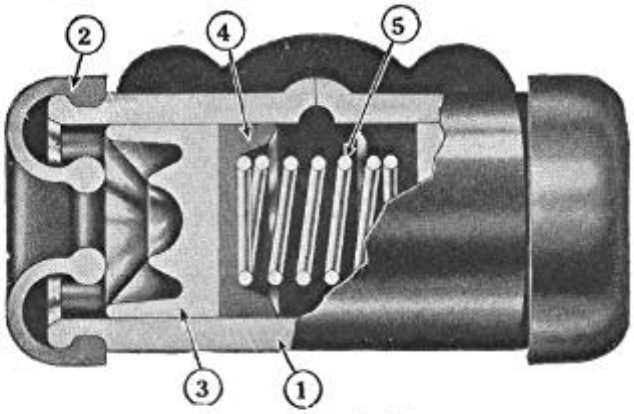

Figure 6—Wheel Cylinder

Wheel Cylinder

The wheel cylinder (Fig. 6) is the unit which changes the applied hydraulic pressure into a mechanical force. The wheel cylinder is composed of:

1. Wheel cylinder casting.
2. Wheel cylinder end guard.
3. Pistons (opposed to each other).
4. Piston cups (opposed to each other).
5. Piston cup return spring.

At the uppermost position and between the piston cups is a bleeder connection used to expel air from the system.

Brake Pedal Goes to Floorboard

If the brake pedal goes to the floorboard, the cause is:

1. Normal wear of lining.
2. Leak in hydraulic system.
3. Air in hydraulic system.
4. No fluid in master cylinder.

When a driver states that it is necessary to pump the pedal several times before the brakes take hold, the chances are that the brake linings are worn, and that it will be necessary to set the shoes closer to the drums.

Brake adjustment should be made according to instructions in the Mechanical Procedure Manual for the particular type of brake on the car being tested. Brake drums should be cool. Do not disturb the brake anchor pin settings on single anchor brakes used on 1940 Models 40T and 40P.

A connection leak in the hydraulic system will allow the brake pedal to go to the floorboard gradually. A cup leak may not result in any loss of travel of the pedal, but will be shown by a loss of fluid in the master cylinder. If no leaks are found at the wheels or connections, then remove the master cylinder and check the bore for scores or scratches.

Air in the hydraulic system will cause a springy or rubbery action of the pedal. Should a sufficient quantity of air enter the system the pedal will go to the toeboard under normal pressure. In this case the hydraulic system should be bled and refilled.

The fluid level in the master cylinder should be checked to see that it is at least half full. If the tank becomes empty, air will get into the system and make it necessary to bleed the hydraulic system.

All Brakes Drag

1. Mineral oil in system.
2. Port hole in master cylinder is closed.

The use of any oil having a mineral base (engine oil, kerosene, etc.) will cause the rubber piston cups in master and wheel cylinders to swell and distort, making them useless. If this happens it is necessary to replace all piston cups. The system will have to be thoroughly flushed out with clean alcohol, and then refilled with Hudson Hydraulic Brake Fluid.

During the past year, the Army Air Forces have released large quantities of surplus aircraft type hydraulic brake fluid, and this has found its way into the hands of civilian merchandisers and jobbers. This fluid is a petroleum product, and while it is considered satisfactory for use in airplanes where synthetic cups and hose lines are used, it will cause trouble in automotive brake systems using natural rubber parts. Use nothing but genuine Hudson Hydraulic Brake Fluid.

The port hole (3, Fig. 5) must not be blocked by failure of the piston cup to return to its proper release position. The hole is a relief port, and if blocked will allow pressure in the hydraulic system to gradually build up and cause the brakes to drag.

One Brake Drags

1. Brake shoe return spring is weak.
2. Brake shoes set too close to the drum.
3. Wheel cylinder cups distorted.
4. Loose wheel bearings.
5. Dirt in the line.

The remedies for these causes are obvious. In the case of No. 3, in addition to replacing the cups, the entire hydraulic system should be flushed with alcohol. No. 5 also calls for flushing and refilling.

Car Pulls to One Side

1. Oil soaked linings.
2. Brake shoes improperly adjusted.
3. Brake backing plate loose.
4. Brake linings of different makes.
5. Tires not inflated correctly.
6. Front wheel caster is incorrect.
7. Loose wheel bearing.
8. Dirt in lining, or drum scored.

Oil or grease soaked linings should be replaced, as they cannot be made to function properly by washing or cleaning.

Sometimes a front wheel brake shoe which is set too close to the drum will cause a slight pull or drift to one side. A rear wheel brake that is set too close will not cause this drift, but may make one wheel lock or slide before the other.

A loose backing plate will allow the brake assemblies to shift on their locating bolts. These locating bolts determine the exact centers, and any shift causes an unequal brake efficiency. Tighten backing plates and readjust the brake shoe.

Different types of brake lining naturally have different friction characteristics. The use of two different makes of lining may give a "soft pedal" action on one shoe and a "hard pedal" action on another, causing uneven braking. When replacing lining, best results are obtained by the use of new factory lined Shoes and Lining Assemblies, or of approved Lining and Rivets Packages, both of which are supplied by the factory Parts Department. x x x

New Regional Service Supervisors

P. E. Freshour

Latest additions to the Factory Field Service Organization are Mr. P. E. Freshour and Mr. C. H. Remmel, who recently assumed their duties as Regional Service Supervisors. Both are well qualified by training and experience for this important work, which requires not only good technical knowledge, but also merchandising and instructive ability, not to mention large measures of tact and diplomacy.

Lately, Mr. Freshour has been located at the Hudson Factory as Resident Representative of Curtiss-Wright Corporation, prior to which he was connected with International Harvester Company. He is well acquainted with service station problems through owning and managing a general garage and repair business.

Mr. Remmel also has had wide and varied experience in the automotive field, through his previous connections with General Motors, United Motors Service, The Automotive Parts Company and others. Most recently he was Supervisor of General Stores with the Sherwin-Williams Corporation.

C. H. Remmel

Mr. Freshour is visiting Distributor points in the great Northwest, relieving Roy Wells of a portion of his vast territory. Mr. Wells, who headquarters in California, continues to function with his usual efficiency in the southern coast region.

Mr. Remmel takes over some of the important Mid-West territory formerly handled by Jack Gilder, who in addition to regularly visiting several Distributors, assumes special work in connection with new Distributors. x x x

STATISTICAL DEPARTMENT

Number of trucks for civilian use made in 1944 (includes bus chassis)	96,084
Number of cars wrecked by automobile graveyards in 1944	503,520
Shipments of automotive replacement storage batteries (9 months of 1944)	13,967,952
Total passenger car registrations in the United States for 1944	25,608,400
Dollar volume of automotive replacement parts made in 1944	$800,000,000
Approximate dollar volume of war material turned out by the automotive industry since Pearl Harbor	$25,000,000,000
Number of "A" card holders satisfied with gas rationing	0

IN A CLASS BY ITSELF

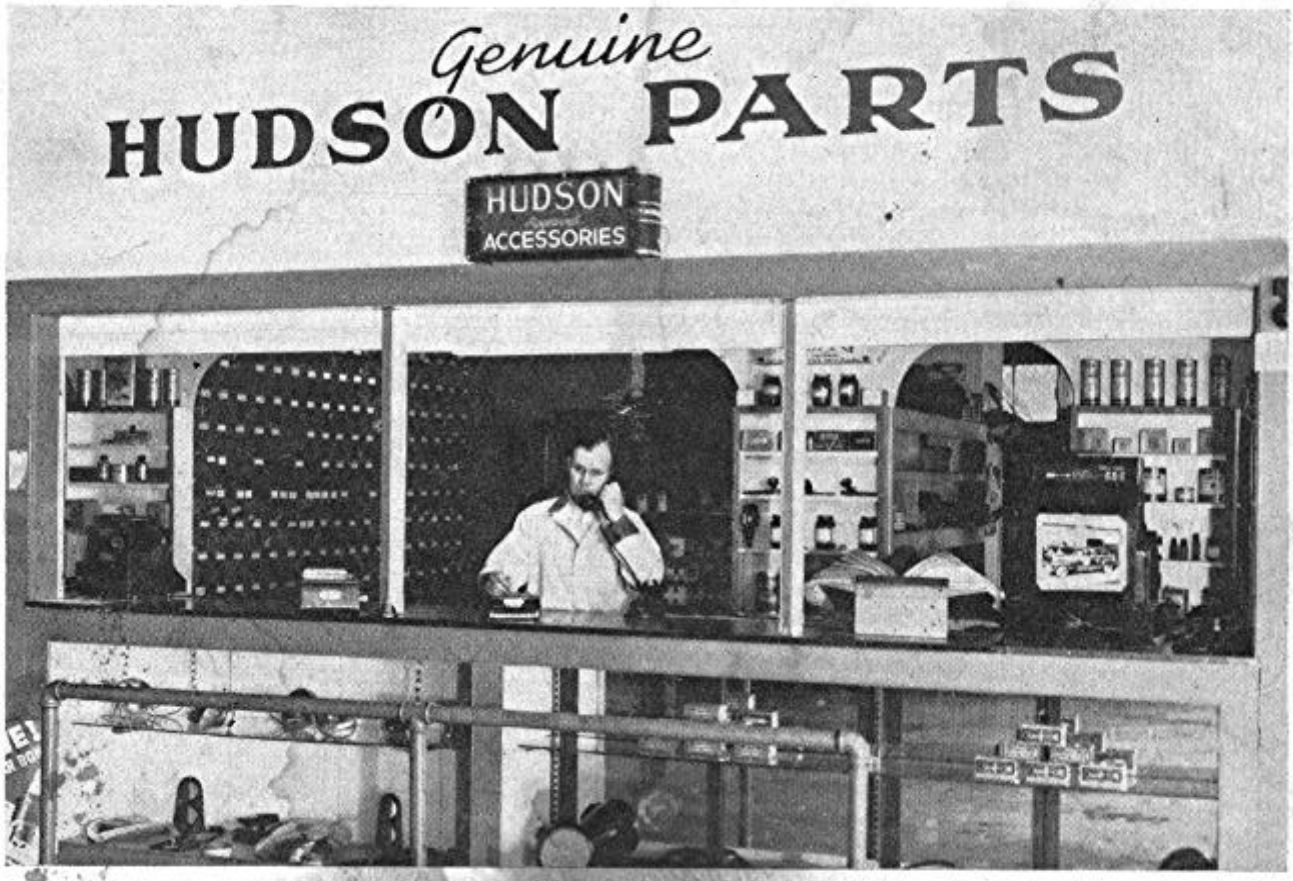

Very attractive, and efficient, too. You just naturally like to buy parts over this counter in the Parts Department of L. H. Strong Motor Company, Hudson Distributor at Salt Lake City, Utah. The capable looking gentleman is Parts Manager Arthur Strong, taking a big phone order from an independent shop.