1937

Reference Sheets

I N D E X

No. 2 - Hudson-RCA Model DB-37 Radio

No. 3 - Hudson-RCA Model SA-57

No. 4 - 1937 Brakes

No. 5 - Front End Alignment

No. 7 - Electrical

Hudson-RCA Victor
Model SA-37

FIVE-TUBE AUTOMOBILE RECEIVER

SERVICE NOTES

Manufactured By

RCA Manufacturing Company, Inc.

Camden, N. J., U. S. A.

For

Hudson Motor Car Company

DETROIT, MICH., U. S. A.

Printed in U. S. A.

Radio Kit—1937—Hudson and Terraplane

MODEL SA-37

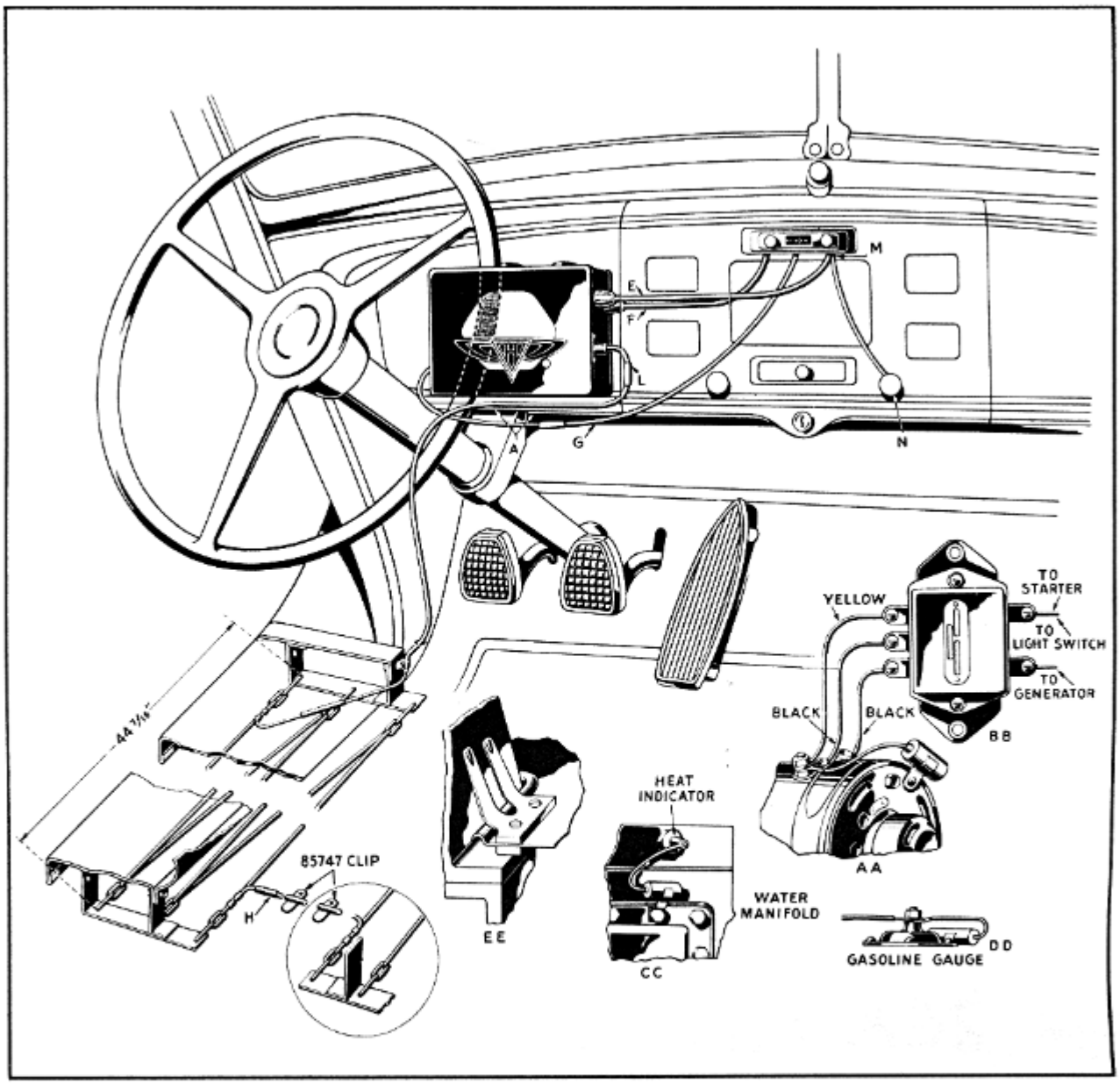

Figure A—Mounting Details and Connections

The Radio Kit, Part No. 153716 Includes:—

- 1—Receiver Complete
- 1—Control Head complete with cables
- 1—Pilot Light Bulb
- 1—Feed Cable Assembly and Fuse
- 1—Aerial Assembly and Brackets
- 1—Aerial Lead-in with shield and clip
- 1—Distributor Suppressor
- 2—Small Condensers
- 1—Large Condenser
- 1—Ground Strap
- 3—Ground Forks
  Bolts, Nuts, Screws and Lock Washers for mounting units

In order to complete the installation on Terraplane Deluxe Models, a Charge Control Kit (Part No. 153193) is required in addition to the Radio Kit.

HUDSON-RCA VICTOR MODEL SA-37

Five-Tube, Superheterodyne, Automobile Receiver

SERVICE NOTES

Electrical Specifications

TUBE COMPLEMENT

(1) RCA-6D6 ..... Radio Frequency Amplifier
(2) RCA-6A8 ..... Oscillator and First Detector
(3) RCA-6K7 ..... Intermediate Amplifier
(4) RCA-6B7. Detector, A-F Amplifier, and A.V.C.
(5) RCA-42 ..... Power Output Amplifier

TUNING RANGE ..... 540 kc. to 1,560 kc.

OUTPUT RATING

Maximum ..... 3.5 Watts
Undistorted ..... 2.25 Watts

LOUDSPEAKER

Type ..... Electrodynamic
Impedance (v.c.) ..... 3.0 ohms at 400 cycles

POWER RATING

Supply Voltage ..... 6.3 Volts (Storage Battery)
Current Drain ..... 6.5 Amperes at 6.3 Volts
Fuse Protection ..... 15 Amperes

PILOT LAMP ..... Mazda No. 51, 7.5 Volts

ALIGNMENT FREQUENCIES

I-F Transformers ..... 260 kc.
Oscillator Coil ..... 600 kc. and 1,400 kc.
Detector Coil ..... 1,400 kc.
Antenna Coil ..... 1,400 kc.

Mechanical Specifications

RECEIVER UNIT

Height ..... 6⅞ Inches
Width ..... 10 1/16 Inches
Depth ..... 7 11/16 Inches
Mounting ..... ⅜ Inch Cap Screws (two)

OPERATING CONTROLS ..... (1) Operating Switch—Volume Control, (2) Tuning Control

TUNING DRIVE RATIO ..... 16 to 1

WEIGHT

Receiver and Accessories Complete (Less Antenna) ..... 18 Pounds
Complete Equipment Packed for Shipment (Less Antenna) ..... 21 Pounds

General Description

This instrument consists of a separated two-unit assembly which includes: (1) a five-tube chassis with self-contained power conversion system and an electrodynamic loudspeaker; and (2) an operating control head.

The receiver is compactly housed in a substantial metal case. There are removable covers to permit ready access to the under and top sides of the chassis. Two mounting studs are used for supporting this unit to the steering column bracket on the car.

The loudspeaker mechanism is mounted in the cover of the receiver case. Field and voice coil connections from this unit to the receiver are by means of plug-in terminals.

The operating controls are located on the remote control unit, which mounts on the instrument panel of the car. Flexible shafts interconnect the remote control knobs and the controlled devices within the receiver housing.

Radio Installation-Operation

1—Lift floor mat and install three ground forks (Part No. 151210) to front, rear and left of floor board opening so that spring fingers contact transmission control housing. (See Insert "EE.") The paint must be removed from the floor panel and transmission tower to provide good electrical contact. A spacer (Part No. 151435) should be placed under each ground fork and the parts secured to the floor board with six screws (Part No. 71648) and three tapping plates (Part No. 151436).

2—Remove finish plate from center of instrument panel—attached with studs and nuts on back of panel.

3—Put the Radio Receiver in place on top of the steering column support bracket with the control shaft connections "E" and "F" on the right, and secure with two cap screws "A." On the right-hand drive models, the receiver is mounted with the control shaft connections to the left. A spacer (Part No. 153847) should be placed under the inside or left-hand attaching screw head before assembling the screw on right-hand drive installation only.

4—Remove the control knobs from the control head, and also the nuts located behind the knobs. Insert control head from back of panel, securing by replacing nuts, and then replace control knobs.

5—Insert the driving tongue of the control cable from the right (tuning) knob into the front socket "E" and tighten nut. Insert the driving tongue of the control cable from the left (volume) knob into the rear socket "F" and tighten nut.

6—Attach wire "G" to socket at left end of case.

7—Attach feed wire to "X" Terminal of the lighting switch "N" and connect to socket "M," to the back of the control head, being sure that fuse is in place in socket.

8—Assemble front and rear antenna support brackets with bolts and nuts to clips welded to bottom of running boards.

9—Mount the right-hand antenna, starting at the inner hole of the rear bracket with the hook near the long lead, which goes across the car, attaching all hooks in order and stretching to insert last hook in outer hole of front bracket.

10—Mount the left-hand antenna starting at the inner hole of the rear bracket with the end opposite the lead-in, working back and forth and stretching to attach the last hook to the outer hole of the front bracket.

11—Connect the right- and left-hand antennas with a bolt and nut "H" with the lead passing over the propeller shaft. Cover the connection with rubber cement and rubber tape. Secure cross lead to the two No. 85747 clips which are welded to the body underpanel to hold it away from the propeller shaft.

12—Insert the lead-in through the hole in body floor panel in line with left front door, front pillar post, leading up behind kick panel behind radio receiver and connect to socket "L." Secure lead-in to front bracket with the bolt and nut.

13—Attach one small condenser on gasoline tank gauge unit with one unit mounting screw, attaching condenser terminal to gauge unit terminal. (Insert "DD.")

14—Attach one small condenser to upper rear cap screw in engine water manifold and attach condenser terminal to terminal of water temperature gauge element. (Insert "CC.")

15—Attach large condenser to cap screw at rear of generator and connect condenser terminal to generator "A" terminal. (Insert "AA.")

16—Install 48763 ground strap from the front muffler bracket to chassis frame. The paint must be removed from points of attachment to insure good electrical contact.

17—Install suppressor in central terminal of distributor.

18—When installing radio on Terraplane Deluxe models, mount generator charge regulator (Insert "BB") in place of relay with two screws to two threaded holes in cowl side panel provided for the purpose. Remove ground cup from generator "F" terminal. See illustration inserts for wiring diagram. Connect "FLD" terminal on side of charge regulator to "F" terminal (engine side) of generator. Adjust generator output to 26 amps., cold—24 amps., warm.

19—Turn on volume and tune set to a known local station. Hold the knurled knob on top of control head with the fingers and adjust the tuning knob to give correct reception for dial setting.

20—Tape control cables "E" and "F" to avoid fouling on cowl ventilator operating lever.

CIRCUIT ARRANGEMENT

The schematic and wiring layouts of the electrical circuit are shown in Figures 2 and 3, respectively. From these diagrams it may be seen that five Radiotrons are incorporated in the basic superheterodyne circuit. In sequence, there is an r-f stage, a dual first detector–oscillator stage, a single i-f stage, a second detector–audio amplifier–a.v.c. stage, and a class "A" output stage. The power supply system contains a mechanical interrupter and rectifier. The following circuit features are of particular importance:

Noise Filter—Reduction of ignition interference and similar disturbances are brought about by filter arrangements in the antenna input circuit and the "A" battery input lead. This antenna filter, L-1, C-1, and C-2, is a "low-pass" type, having an acceptance band below 1,600 kc. The inductance L-2 is for the purpose of shunting out power line hum pickup.

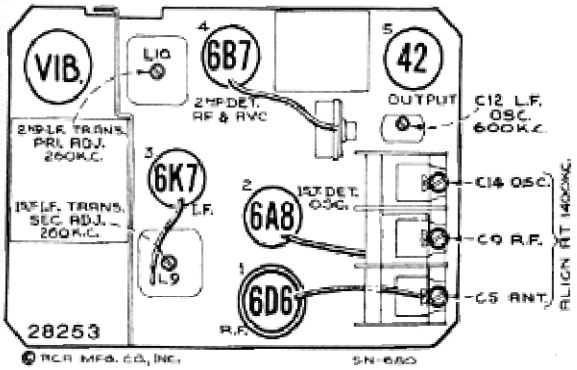

Figure 1—Radiotron Locations

Tuned Circuits—There are seven resonant circuits in the radio frequency end of the receiver. The r-f, first detector, and oscillator grid circuits are tuned by a three-gang tuning condenser. The remaining tuned circuits consist of the primary and secondary windings of the i-f transformers, which resonate with fixed condensers and are tuned by adjustable magnetite cores to a nominal frequency of 260 kilocycles.

Detection and A.V.C.—Detection takes place as a result of the rectifying action of one of the diodes of the RCA-6B7 tube, the voltage being developed across resistors R-6 and R-8. A portion of the audio component of this voltage is applied to the control grid of this same tube through the arm of the volume control, thus giving a means of continuously varying the voltage input to the audio amplifier.

The d-c component of the voltage developed across resistors R-6 and R-8 is applied as a.v.c. bias to the control grids of the r-f, first detector, and i-f tubes through a suitable filter network.

Audio System—As mentioned under "Detection," the audio component of the detected signal is selected from the manual volume control and applied to the control grid of the RCA-6B7 tube. The plate circuit of this tube is connected through capacitor C-26 to the control grid of the output tube, an RCA-42. This tube is coupled through the output transformer T-2 to the loudspeaker.

SERVICE DATA

Regular maintenance will assure proper operation of this receiver over an extensive period of life. It should, therefore, receive the same routine inspections and adjustments as are accorded the mechanical and electrical systems of the car. The following service information suggests procedure to be applied in locating and repairing faults which may develop and affect the operation of the receiver.

Defects External To Receiver

Interference—Failure or disconnection of spark-suppressing capacitors at gas gauge, temperature indicator, and generator will allow the ignition interference produced at such points to be radiated and picked up by the receiver. Defects in the ignition system not only affect operation of the car, but will produce radio interference as well. The system should, therefore, be thoroughly checked and repaired if necessary. The three pairs of bonding fingers attached to the floor boards which contact the transmission control cover, and the bonding strap from muffler front bracket to chassis frame side member for noise reduction, may develop loose connections and cause intermittent noise level in the receiver. In checking the receiver for noisy operation, it is also wise to make sure that interference is not being caused by disturbing electrical devices which are not part of, but are in vicinity of, the car.

Battery—Corroded terminals at the storage battery will usually result in low voltage at the receiver and consequent low sensitivity. Noise may also be generated by this condition. Battery conditions will be reflected in the motor operation as well as that of the radio.

Antenna—Vibration may occasionally cause the antenna connections to become loose or broken. These should be carefully checked and repaired, if necessary. Corrosion due to weather is also deleterious at these points. Each connection should be thoroughly cleaned, to assure solid contact at all times. The grounding point of the antenna lead shield is at the front, left, running board bracket. This point of connection should not be changed, since its position on the car is very critical in regard to interference. The ground connection to the case of the receiver should be kept in secure connection to the frame of the car at all times; if loose, it may cause intermittent operation of the receiver, loss of sensitivity, or will produce noisy reception.

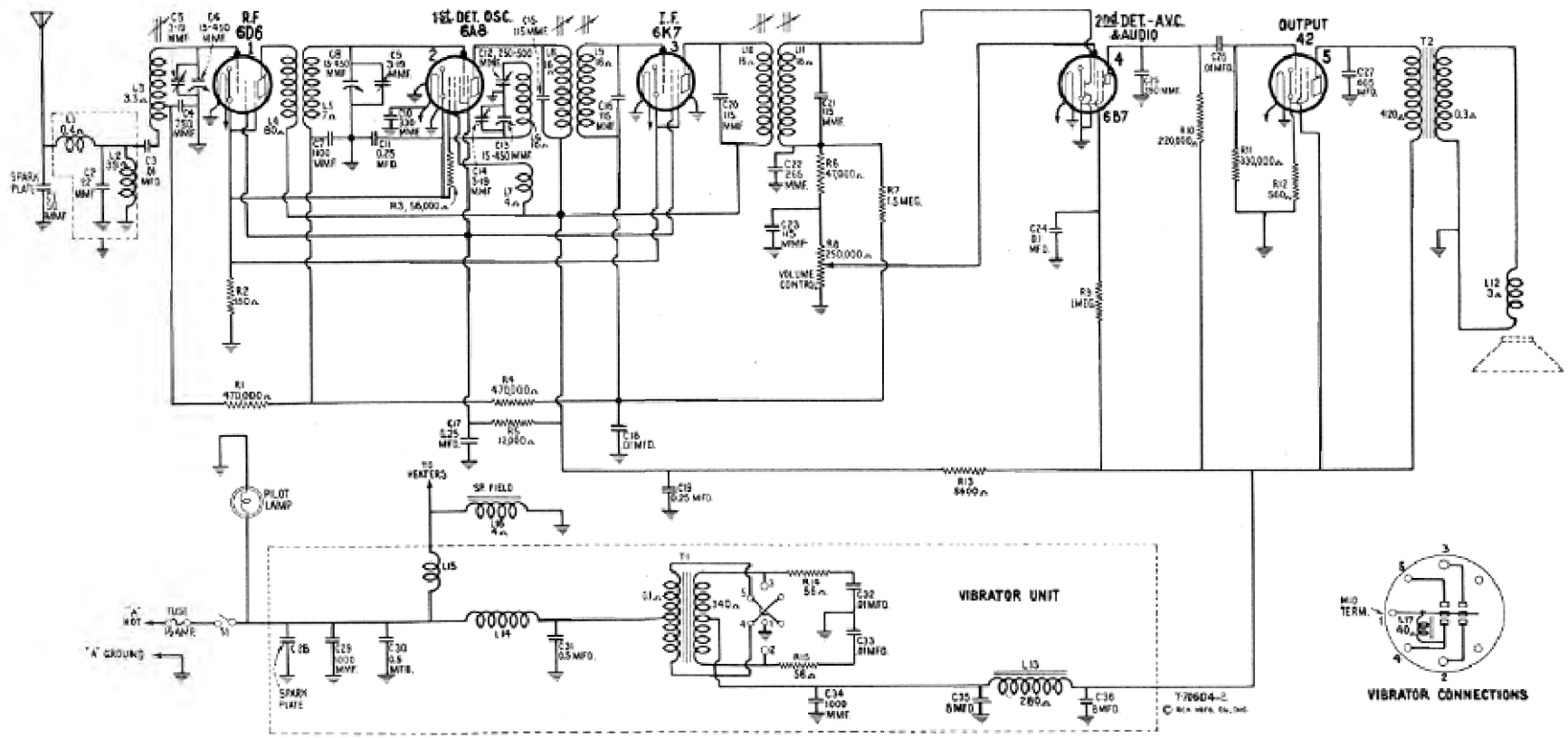

Figure 2—Schematic Circuit Diagram

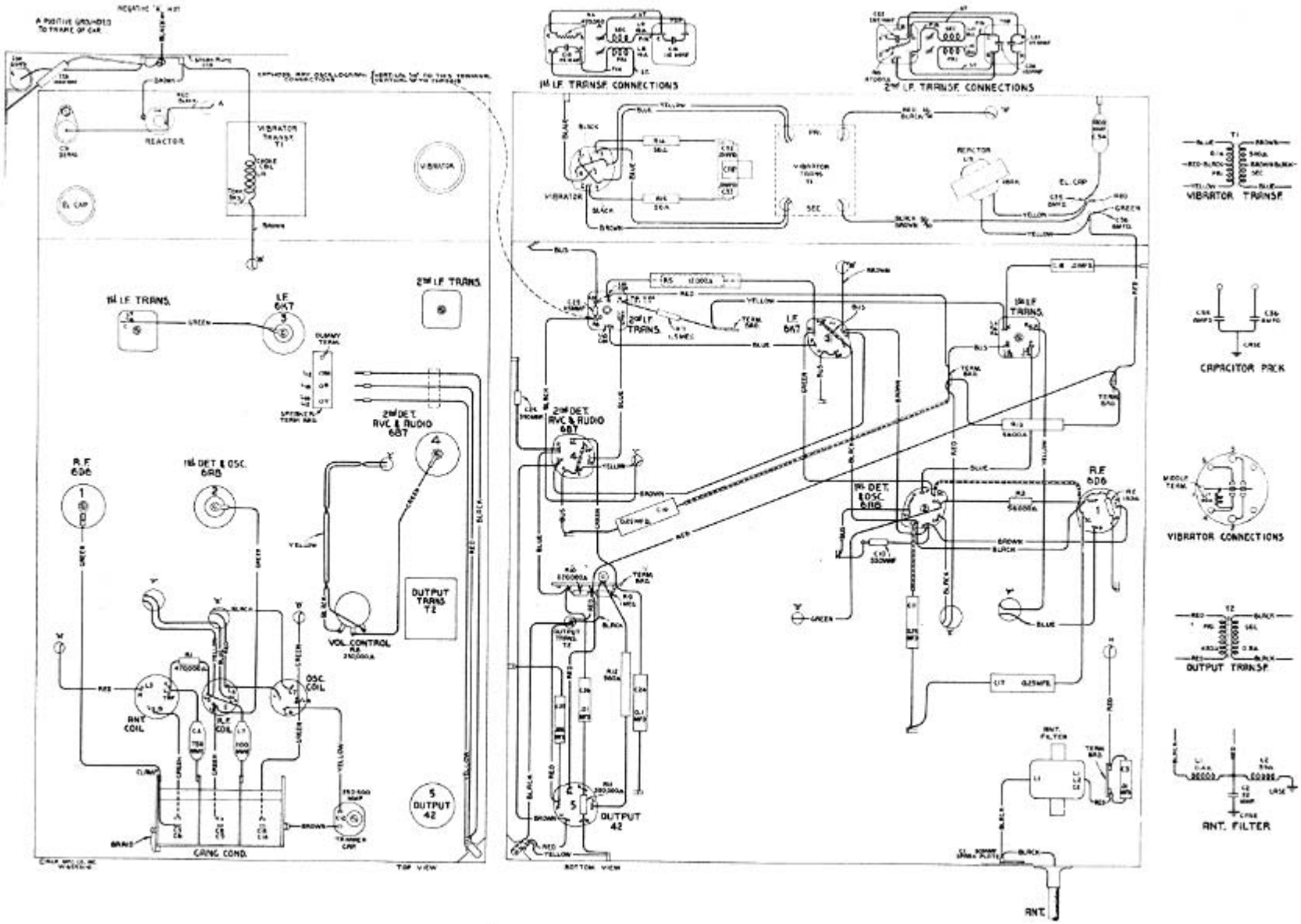

Figure 3—Chassis Wiring Diagram

Defects Within Receiver

Total Inoperation—Failure to operate may be due to one or more causes. When a receiver is found in such condition, its parts should be checked as follows:

(a) FUSE—May be burned out or making poor contact. In case of burnout, replace with a fuse of equivalent rating. If second fuse fails, remove receiver from car and investigate condition of interrupter and receiver circuits.

(b) TUBES—Dismount the receiver and remove top cover. Check to see that all tubes are correctly placed in their proper sockets. One or more tubes may be defective. To determine their condition, remove them from the receiver and test with standard tube-testing equipment. If such equipment is unavailable, substitute the tubes with others known to be in good condition. It is not advisable to test the tubes while in the receiver, due to measurement errors which would result from the associated circuits.

(c) INTERRUPTER—Improper operation of the power supply interrupter is usually evidenced by reception of "sputtering noise." To check, remove the antenna connection and advance the receiver volume control (engine off). An increase in noise will usually indicate that the interrupter is in poor condition. Further investigation should be made by substitution of the interrupter with one known to be in good condition. No adjustments should be attempted on this unit. The operation of the interrupter and the associated rectifier system may also be proved normal by measurement of the filter output voltage, which should read steady at approximately 260 volts (d-c). The points of test are indicated by Figure 6.

(d) CIRCUIT—Failures within the basic circuits of the receiver may be isolated by a systematic test procedure. The receiver should be removed from the car and placed where it will be readily accessible. Covers of the top and bottom of the receiver housing should be removed. Continuity tests should be made to ascertain the condition of the speaker voice coil and field circuits. Battery voltage should then be applied to the equipment, the operating switch turned to "On" and voltage measurements made at the receiver circuits to determine whether or not the power system is functioning properly. If no voltage or incorrect voltage is indicated at the filter output, individual tests should be made on the "A-Hot" wiring, power transformer, interrupter, and filter reactor to locate the defective part. If proper voltage is indicated at the filter output, then a thorough voltage analysis of the receiver circuit is in order. Figure 6 gives the values which should be obtained on a receiver in normal operating condition. Deviations from the specified values may be as much as ± 20% before the operation of the receiver is appreciably affected. The absence or erratic reading of one or more of the voltages will indicate a fault in the particular circuit under test; in which case each transformer, resistor, capacitor, choke, and conductor of the circuit should be individually checked for open circuit, short circuit, and grounding. Reference to the diagram, Figure 2, will give the values of the circuit elements and their schematic relations. Figure 3 illustrates the physical locations of the parts and the color coding of the wiring. Defective parts should be renewed only with genuine factory tested replacements.

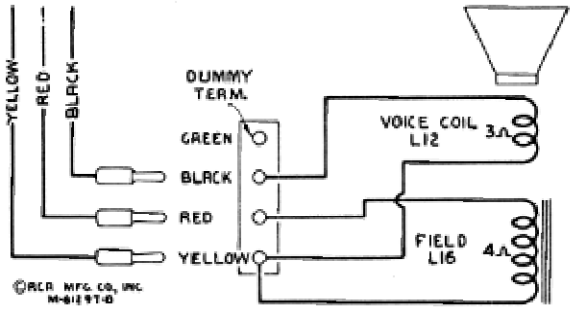

Figure 4—Loudspeaker Schematic and Wiring

Intermittent Operation—Operation may sometimes be irregular. In the majority of cases, the source of such trouble is at a connection or within a tube. Exchange of the tubes is the most definite method of tracing tube defects of this sort. A connection which is intermittent cannot be readily disclosed by regular test methods. Each connection of the complete system of wiring should be carefully inspected and checked to assure that it is secure. Intermittent or distorted reception may occasionally be caused by a partially defective resistor, capacitor, or winding. This type of defect is difficult to isolate; however, the suspected parts should be carefully checked for proper value, leakage, shorted turns, etc. Should it be impossible to locate the fault by such a method, the receiver should be placed in operation and allowed to operate at full volume for several hours. The weakened or defective part will generally fail completely under such condition and its identification can be established by the regular continuity or voltage tests.

Alignment Procedure

All of the adjustable circuits of this receiver have been properly aligned at the factory to give correct performance, and their settings should remain intact indefinitely when the receiver is used under ordinary conditions. However, necessity for readjustment may occasionally occur from continued extremes of climate, tampering, purported alteration for service

purposes, or after repairs have been made to the r-f or i-f tuned circuits. Improper alignment usually causes the receiver to be insensitive, non-selective, and subnormal in respect to tone quality. Such indications will usually exist simultaneously.

In readjusting the tuning circuits, it is important to apply a definite procedure and to use adequate and reliable test equipment. A standard test oscillator, such as the RCA Stock No. 9595, will be required as the source of signal at the specified alignment frequencies. Means for indication of the receiver output during alignment is also necessary to accurately show when the correct point of adjustment is reached. Two indication methods are applicable. One requires use of cathode-ray oscillograph equipment, and the other requires a voltmeter or glow type of indicator. The cathode-ray alignment method is advantageous in that the indication provided is in the form of a wave image which represents the resonance characteristics of the circuits being tuned. This type of alignment is possible through use of apparatus such as the RCA Stock No. 9558 Frequency Modulator and the RCA Stock No. 9545 Cathode-Ray Oscillograph. Alignment by the output meter method should be indicated by an instrument such as the RCA Stock No. 4317 Neon Glow Indicator. The two procedures are outlined as follows:

OUTPUT METER ALIGNMENT

Place the receiver in operation with its two covers removed. Attach the output indicator across the loudspeaker voice coil circuit. Advance the receiver volume control to its maximum position, letting it remain in such position for all adjustments. For each adjusting operation, regulate the test oscillator output control so that the signal level is as low as possible and still observable at the receiver output. Use of such small signal will obviate broadness of tuning which would otherwise result from a.v.c. action on a stronger one.

I-F Adjustments

(a) Connect the output of the test oscillator to the control grid cap of the i-f tube (RCA-6K7) through a 0.25 mfd. capacitor and connect the ground of the oscillator to the receiver chassis. Adjust the frequency of the oscillator to 260 kc. Tune the receiver to a point where no interference is received from the heterodyne oscillator or local stations.

(b) Adjust the two screws (attached to magnetite cores) of the second i-f transformer, one on top and one on bottom, until maximum output is produced by the indicating device.

(c) Remove the oscillator from the i-f tube input and connect it between the control grid cap of the first detector tube (RCA-6A8) and chassis-ground, using the 0.25 mfd. capacitor as previously. Allow its tuning to remain at 260 kc. Tune the receiver to avoid interference as in (a).

(d) Adjust the two screws of the first i-f transformer for maximum (peak) receiver output. The indication for this adjustment will be broad due to the "flat-top" characteristic of the i-f system. The two screws should, therefore, be very carefully adjusted so that the indicator remains fixed at maximum as the oscillator is shifted through a range 2 kc. above and below its normal setting of 260 kc. An irregular double-peaked indication is to be avoided.

R-F Adjustments

NOTE: To eliminate vibrator interference, it may be advisable to replace the bottom cover before making the r-f adjustments.

(a) Check the calibration of the dial scale of the remote control unit by rotating the tuning control until the variable condenser plates are in full mesh (maximum capacity). This will carry the dial scale to its minimum frequency position. The slotted screw-head on the top of the control box should then be turned until the dial scale sets exactly on the last graduation at the low-frequency end of the dial scale.

(b) Connect the output of the test oscillator to the antenna-ground cable of the receiver with a 300 mmfd. capacitor in series with the antenna lead. If the antenna lead-in is used, the value of this capacitor should be 210 mmfd. Tune the oscillator to 1,400 kc. Allow the output indicator to remain attached to the receiver output.

(c) Tune the receiver so that the dial reading is 1,400 kc. Then adjust the oscillator, detector, and antenna coil trimmers, C-14, C-9, and C-5 respectively, tuning each to the point producing maximum indicated receiver output.

(d) Shift the oscillator frequency to 600 kc. and tune the receiver to pick up this signal, disregarding the dial reading at which it is best received. The oscillator series trimmer, C-12, should then be adjusted, simultaneously rocking the receiver tuning control backward and forward through the signal until maximum (peak) receiver output results from the combined operations. The adjustment of C-14, C-9, and C-5 should be repeated as in (c) to correct for any change in their alignment due to the adjustment of C-12.

NOTE: The antenna coil has a magnetite core which is adjusted at the factory for the correct inductance. **This adjustment should not be disturbed.**

CATHODE-RAY ALIGNMENT

Attach the cathode-ray oscillograph vertical input terminals to the second detector output, with the "Hi" connected to the junction of the two resistors, R-6 and R-8, and the "0" connected to the receiver chassis. Advance the vertical amplifier gain control of the oscillograph to full-on, allowing it to remain at such position for all adjustments. Turn the ver-

tical "A" amplifier to "On." Set the oscillograph power switch to "On" and adjust the intensity and focusing controls to give a sharply defined spot on the screen. Interconnect the frequency modulator impulse generator terminals to the oscillograph "Ext. Sync." terminals, as shown by Figure 5.

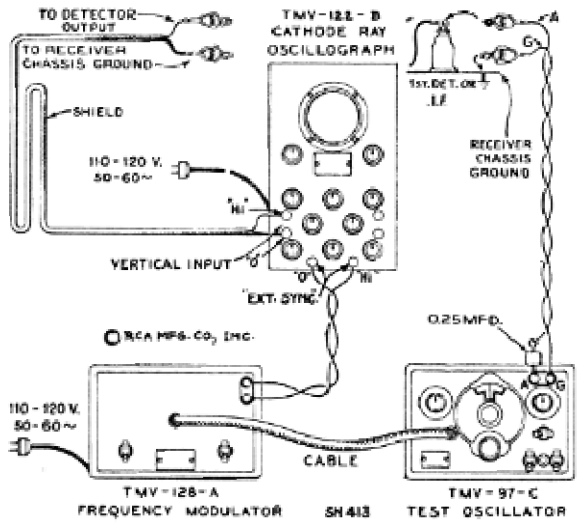

Figure 5—Alignment Apparatus Connections

I-F Adjustments

(a) Connect the output of the test oscillator to the control grid cap of the i-f tube (RCA-6K7) through a 0.25 mfd. capacitor and connect the ground of the oscillator to the receiver chassis. Tune the oscillator to 260 kc., place its modulation switch to "On" and its output range switch to "Hi." The frequency modulator must not be connected to the oscillator for the preliminary adjustments.

(b) Set the cathode-ray oscillograph horizontal "B" amplifier to "Timing" and the synchronizing switch (timing) to "Int." Place the synchronizing input and frequency controls to about their mid-positions. Turn the range switch to its No. 1 position.

(c) Increase the output of the oscillator until a deflection is noticeable on the oscillograph screen. The figure obtained represents several waves of the detected signal, the amplitude of which may be observed as an indication of output. Cause the wave image formed (400-cycle waves) to be spread completely across the screen by advancing the horizontal "B" gain control. The image should be synchronized and made to remain motionless by adjustment of the synchronizing input and frequency controls.

(d) Adjust the two screws (attached to magnetite cores) of the second i-f transformer, one on top and one on bottom, to produce maximum vertical deflection of the oscillographic wave which is present on the screen. This adjustment places the transformer in exact resonance with the 260 kc. signal.

(e) The sweeping operation should follow using the frequency modulator. Shift the oscillograph synchronizing switch to "Ext.", change its range switch to No. 2 position and set the frequency control to its mid-position. Place the frequency modulator in operation, with its sweep range switch in the "Lo" position. Interconnect the test oscillator and frequency modulator with the special shielded patch cord provided. Turn the oscillator modulation switch to "Off."

(f) Increase the frequency of the test oscillator by slowly turning its tuning control until two separate, distinct, and similar waves appear on the screen. These waves will be identical in shape, but will be totally disconnected and appearing in reversed positions. They will have a common base line, which is discontinuous. Adjust the frequency and synchronizing input controls of the oscillograph to get the proper waves and to make them remain motionless on the screen. Continue increasing the oscillator frequency until the forward and reverse curves move together and overlap, with their highest points exactly coincident. This condition will obtain at an oscillator setting of approximately 360 kc.

(g) With the images established as in (f), readjust the two screws on the second i-f transformer so that they cause the curves on the oscillograph screen to become exactly coincident throughout their lengths and have maximum amplitude.

(h) Without altering the adjustments of the apparatus, shift the output connections of the oscillator to the input of the i-f system, i. e., between the first detector (RCA-6A8) control grid and ground through a 0.25 mfd. capacitor. Regulate its output so that the amplitude of the oscillographic image is approximately the same as used above for adjustment (g) of the second i-f transformer.

(i) The two first i-f transformer adjustment screws, one on top and one on bottom, should then be adjusted so that they cause the forward and reverse curves to become coincident throughout their lengths and have maximum amplitude. The composite wave obtained in this manner represents the resonance characteristic of the total i-f system. Lack of symmetry or irregularity of the resultant image will indicate the presence of a defect in the i-f system.

R-F Adjustments

(a) Calibrate the receiver dial scale by rotating the tuning control until the variable condenser is in full mesh. The slotted screw-head on the top of the control box should then be turned until the dial scale rests exactly on the last graduation at the low-frequency end.

(b) Attach the output of the test oscillator to the receiver input, i. e., between the antenna-ground cable, with a 300 mmfd. capacitor in series with

antenna lead. If the antenna lead-in is used, the value of this capacitor should be 210 mmfd. Accurately tune the oscillator to 1,400 kc. The oscillograph should be left connected to the second detector output circuit as for the above i-f adjustments. Return the synchronizing switch to its "Int." position and turn the range switch to its No. 1 position.

(c) Tune the receiver to a dial reading of 1,400 kc. Adjust trimmers C-14, C-9, and C-5 of the oscillator, detector, and antenna coils so that each causes maximum vertical deflection (amplitude) of the images. The output of the oscillator should be regulated so that the waves on the oscillograph screen are of a convenient observable size. Adjustment of the synchronizing and frequency controls on the oscillograph will cause the waves to remain motionless on the screen.

(d) The oscillator modulation should then be turned to "Off" and the frequency modulator placed in operation, connected to the oscillator with the shielded patch cord. Change the oscillograph synchronizing switch to "Ext.", set its range switch to its No. 2 position and the frequency control slightly above its mid-position.

(e) Increase the frequency of the test oscillator gradually, until the point is reached where the two similar, distinct, and separate wave images appear on the screen and become coincident at their highest points. This will occur at an oscillator setting of approximately 1,500 kc. These waves should be synchronized on the oscillograph screen by careful readjustment of the synchronizing and frequency controls. Readjust trimmers, C-14, C-9, and C-5, to produce complete coincidence at maximum amplitude of the two waves.

(f) Disconnect the frequency modulator from the oscillator. Place the modulation switch of the oscillator to "On" and tune the oscillator to 600 kc. Set the synchronizing switch of the oscillograph to "Int." and turn the range switch to No. 1 position.

(g) Tune the receiver station selector control so as to pick up the 600 kc. signal, disregarding the dial reading at which it is best received.

(h) Change the oscillograph synchronizing switch to "Ext." and place the oscillator modulation switch to "Off." Interconnect the frequency modulator and oscillator with the special shielded patch cord. Return the range control of the oscillograph to its No. 2 position and set the frequency control slightly above its mid-position.

(i) Shift the test oscillator to its 200-400 kc. range and tune it to the point at which the forward and reverse waves show on the oscillograph

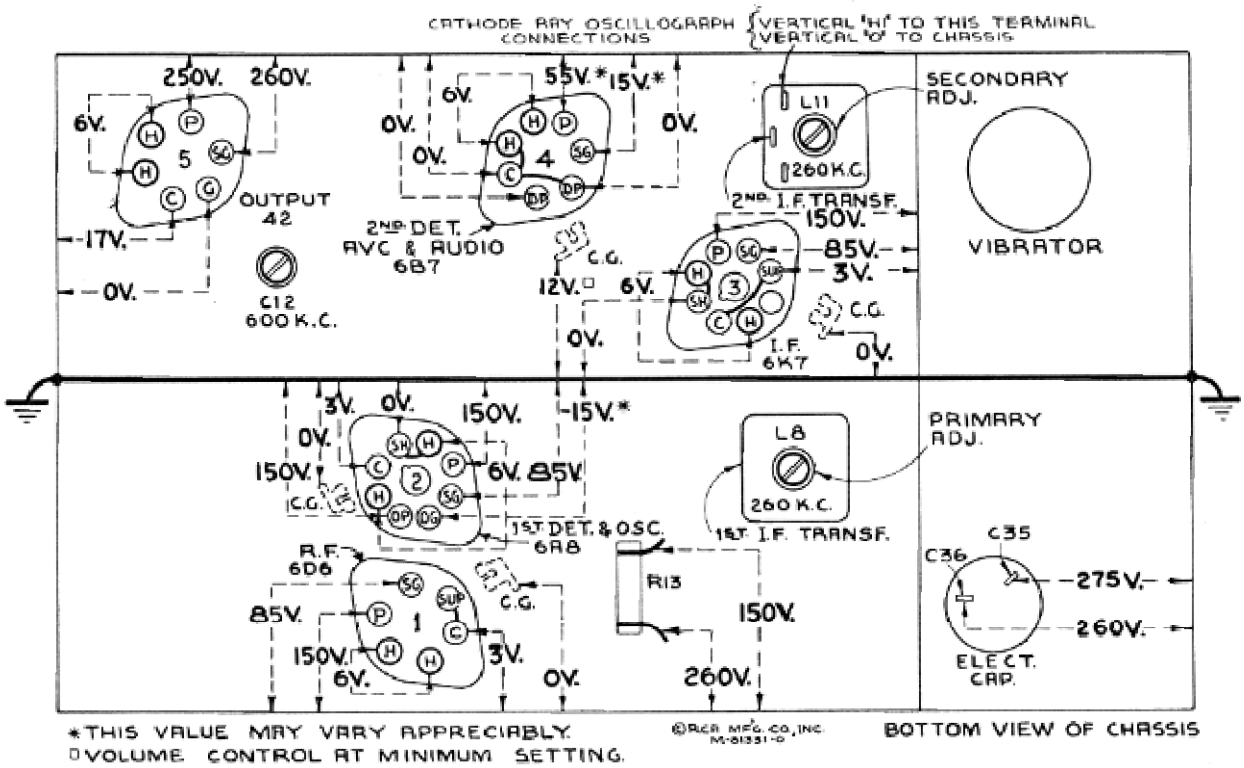

Figure 6—Radiotron Socket Voltages to Chassis

(Measured at 6.3 volts battery supply—Volume Control Minimum—No Signal)

screen. This condition will be obtained at an oscillator setting of approximately 230 kc. The signal obtained from the oscillator for this adjustment will be the third harmonic of 200 kc. An increase in the oscillator output may be necessary. The trimmer C-12 should then be adjusted to the point which produces maximum amplitude of the oscillographic images. It will not be necessary to rock the tuning control for this adjustment, inasmuch as the frequency modulator is varying the signal in an equivalent manner.

(j) Retune trimmers C-14, C-9, and C-5 as in (c), (d), and (e) to correct for any change in high-frequency alignment which may have been caused by the adjustment of C-12.

After the receiver has been replaced in the car, it may be necessary to make a final correction of the dial scale by tuning in a station of known frequency and adjusting the scale by means of the slotted screw-head on the top of the control head.

Tuning Condenser Drive

Smooth control should be obtained over the entire tuning range of the variable condenser. If irregularity is present, check the action of the gear mechanism for binding or backlash at every point within the tuning range. A bind may be due to improper mesh between the worm gear and the large gears on the condenser shaft. To correct such a condition, loosen the screws holding the gear plate and adjust the mesh of the gears to a position which gives smooth operation. Gear backlash is prevented by the small compression spring between the two large gears on the rotor shaft.

Interrupter

The mechanical interrupter used in the power system is constructed with a plug-in base, so as to be easily removed from the receiver. Its adjustments have been correctly set during manufacture by means of special equipment. In cases of faulty operation of the interrupter, a renewal should be made.

The symmetrical plug-in base on this device permits the unit to be placed in its socket so as to give correct output voltage polarity on an automobile with either a positive or negative "A" ground. For installation with positive "A" ground, insert vibrator so positive (+) symbol is nearest label on vibrator compartment partition; for negative "A" ground, insert with negative (–) symbol nearest label. The 1937 Hudsons and Terraplanes have position (+) battery grounded.

Radiotrons

Deterioration of tubes and their approach to failure is usually evidenced by noisy or intermittent operation, loss of sensitivity, and distorted tone quality. When suspected as faulty, the tubes should be removed from the receiver and checked with standard tube testing apparatus. It is not feasible to test the tubes while in the receiver, due to measurement inaccuracies which would result from the effects of the circuits.

Receiver Housing

The screws holding the receiver chassis to the case must all be in place and tightly installed, inasmuch as they appreciably affect the ground resistance of the assembly and will consequently have a bearing on the amount of ignition noise received.

Radiotron Socket Voltages

Operating conditions of the basic circuits of this instrument may be determined by measuring the voltages applied to the tube elements. Figure 6 shows the voltage values from the socket contacts to ground and appearing across the heater contacts (H-H). Each value as specified should hold within ± 20% when this instrument is normally operative, with all tubes intact and rated voltage applied. Variations in excess of this limit will usually be indicative of trouble.

The voltages given on this diagram are actual measured voltages, and are obtained with the voltmeter load in the circuit.

To fulfill the conditions under which the d-c voltages were measured requires a 1,000-ohm-per-volt d-c voltmeter having ranges of 10, 50, 250, and 500 volts. Voltages below 10 volts should be measured on the 10-volt scale; between 10 and 50 on the 50-volt scale; between 50 and 250 on the 250-volt scale; and above 250 on the 500-volt scale.

For meters of the 1,000-ohm-per-volt type, but ranges other than above, use the nearest ranges to those specified. If the range is higher the voltage may be higher, if the range is lower the voltage may be lower; either condition depending on the percentage of circuit current drawn by the meter.

REPLACEMENT PARTS

Insist on genuine factory tested parts, which are readily identified and may be purchased from authorized dealers

Hudson Stock No.	RCA Stock No.	DESCRIPTION
		RECEIVER ASSEMBLIES
BO 153817	12511	Cap—Grid contact cap for metal tubes—Package of 5
BO 153818	12118	Cap—Grid contact cap for glass tubes—Package of 5
BO 153819	13375	Capacitor—Adjustable capacitor (C12)
BO 153822	13433	Capacitor—115 mmfd. (C23)
BO 152067	11998	Capacitor—115 mmfd. (C15, C16, C20, C21)
BO 153824	13432	Capacitor—330 mmfd. (C10)
BO 153825	12764	Capacitor—390 mmfd. (C25)
BO 153826	13429	Capacitor—750 mmfd. (C4)
BO 153827	12762	Capacitor—1,000 mmfd. (C29)
BO 153899	13434	Capacitor—1,000 mmfd. (C34)
BO 153828	13430	Capacitor—1,100 mmfd. (C7)
BO 153900	4838	Capacitor—.005 mfd. (C27)
BO 152072	4858	Capacitor—.01 mfd. (C3, C18, C26)
BO 153901	4839	Capacitor—.1 mfd. (C24)
BO 153829	12484	Capacitor—0.25 mfd. (C17, C19)
BO 153902	4840	Capacitor—0.25 mfd. (C11)
BO 151329	11418	Capacitor—0.5 mfd. (C30)
BO 152075	5019	Capacitor—0.5 mfd. (C31)
BO 152077	12233	Capacitor pack—Comprising 2 sections of .01 mfd. each (C32, C33)
BO 153903	13114	Capacitor pack—Comprising 2 sections of 8 mfd. each (C35, C36)
BO 152079	12235	Coil—Choke coil (L14)
BO 153830	13378	Coil—Antenna coil with shield (L3)
BO 153904	13418	Coil—R. F. coil less shield (L4, L5)
BO 153832	13376	Coil—Oscillator coil less shield (L6, L7)
BO 153833	13371	Condenser—3-gang variable tuning condenser (C5, C6, C8, C9, C13, C14)
BO 152084	12006	Core—Adjustable core for I. F. Trans. Stock No. 12229 or No. 13419
BO 152085	12289	Coupling—Station selector flexible shaft coupling
BO 152086	12239	Filter—Antenna filter (L1, L2, C2)
BO 153834	13372	Gear—Large gear for tuning condenser — located on condenser shaft
BO 153835	13373	Gear—Worm gear, screw and lock-nut for variable condenser
BO 152089	12242	Guide—Station selector shaft guide
BO 153905	12485	Pin—Contact pin for speaker leads —Package of 5
BO 152090	12232	Reactor—Filter reactor—iron core (L13)
BO 152091	5034	Resistor—56 ohms—carbon type—¼ watt (R14, R15)—Package of 5
BO 153907	13428	Resistor—150 ohms—insulated—¼ watt (R2)—Package of 5
BO 153908	11845	Resistor—560 ohms—carbon type —1 watt (R12)—Package of 5
BO 152095	8097	Resistor—5,600 ohms—carbon type —2 watts (R13)
BO 153909	3066	Resistor—12,000 ohms — carbon type—1 watt (R5)—Package of 5
BO 151352	5132	Resistor—47,000 ohms —carbon type—1/10 watt (R6)—Package of 5
BO 152100	12286	Resistor—56,000 ohms—insulated—¼ watt (R3)—Package of 5
BO 152103	12264	Resistor—220,000 ohms—insulated —¼ watt (R10)—Package of 5
BO 153910	12452	Resistor—330,000 ohms—insulated —½ watt (R11)—Package of 5
BO 152104	12285	Resistor—470,000 ohms—insulated —¼ watt (R1)—Package of 5
BO 152105	11452	Resistor—470,000 ohms — carbon type—1/10 watt (R4, R7)—Package of 5
BO 153841	12200	Resistor—1 megohm—insulated—¼ watt (R9)—Package of 5
BO 152106	12287	Resistor—1.5 megohms—insulated —¼ watt (R7)—Package of 5
BO 151360	3584	Ring—Retaining ring for R. F. or oscillator coil—Package of 5
BO 152107	12290	Shield—Radiotron shield
BO 151363	3623	Shield—R. F. or oscillator coil shield
BO 152108	12227	Socket—8-contact 6A8 or 6K7 Radiotron socket
BO 152109	4786	Socket—6-contact 6D6 or 42 Radiotron socket
BO 152110	4787	Socket—7-contact 6B7 Radiotron socket
BO 152111	12241	Socket—6-contact vibrator socket
BO 153842	12007	Spring—Retaining spring for core, Stock No. 12006—Package of 5
BO 152113	12226	Stud—Variable tuning condenser mounting stud assembly
BO 153843	13419	Transformer—First intermediate frequency transformer (L8, L9, C15, C16, R4)
BO 152115	12229	Transformer—Second intermediate frequency transformer (L10, L11, C20, C21, C22, R6)
BO 153911	12364	Transformer—Output transformer (T2)
BO 152117	12231	Transformer—Vibrator power transformer (T1)
BO 152118	12236	Vibrator—Complete (L17)
BO 153912	13420	Volume control (R8)
		CONTROL HEAD AND FLEXIBLE SHAFT ASSEMBLIES
BO 153844	13548	Body—"A" lead connector body—female section—Package of 10
BO 153845	13437	Body—Control box body
BO 152135	12291	Body—Fuse connector body—female section—Package of 10
BO 153292	13436	Box—Control box complete—less cables, flexible shafts and knobs
BO 153293	13379	Bushing—⅜—24-19/32 threaded bushing to mount control head—Package of 2
BO 153849	13438	Cover—Control box back cover
BO 153850	13450	Crystal—Station selector dial crystal
BO 153851	13451	Dial—Station selector dial scale
BO 151726	4286	Ferrule—"A" lead connector, fuse connector or lamp socket bushing and ferrule—Package of 10
BO 71406	5023	Fuse—15 amperes—Package of 5
BO 153852	13439	Gear—Gear for dial sprocket
BO 153853	13443	Gear—Intermediate gears and shaft assembly for dial scale
BO 152125	4290	Insulator—Fuse connector insulator—Package of 10
BO 153278	13421	Knob—Tuning or volume control knob—Package of 5
BO 71641	11765	Lamp—Dial lamp—Package of 5

REPLACEMENT PARTS (Continued)

Hudson Stock No.	RCA Stock No.	DESCRIPTION
BO 152127	12274	Lead—"A" lead complete with female section of connector—connects control box switch to receiver
BO 153854	13549	Lead—"A" lead and bracket complete with male section of connector—connects control box switch to fuse connector
BO 152128	12276	Lead—"A" lead complete with female section of fuse connector—less fuse and fuse insulator—connects car "A" terminal to control box
BO 153855	13551	Nut—Knurled—less set-screw for dial sprocket adjustment—Package of 5
BO 153856	13446	Retainer—Retainer spring for intermediate shaft and gear assembly—Package of 5
BO 153857	13447	Retainer—Retainer spring for station selector or volume control knob shaft—Package of 5
BO 153858	13442	Roller—Bracket and roller assembly for dial scale
BO 153205	13422	Screw—No. 6-32 x 7/32" headless, cone point set-screw for tuning or volume control knob—Package of 10
BO 153859	4387	Screw—No. 6-32 x ¼" headless set-screw for dial sprocket adjustment nut—Package of 10
BO 153860	13444	Shaft—Station selector control shaft complete with worm gear
BO 153861	13546	Shaft—Tuning control flexible shaft complete, approximately 16¾" long
BO 153862	13547	Shaft—Volume control flexible shaft complete, approximately 20¾" long
BO 153863	13445	Shaft—Volume control shaft complete with switch operating pin
BO 153864	13550	Socket—Dial lamp socket and lead
BO 151724	4284	Spring—"A" lead connector, fuse connector or lamp socket spring—Package of 10
BO 153204	13553	Spring—Retaining spring for tuning or volume control knob—Package of 10
BO 153865	13449	Spring—Tension spring for bracket and roller assembly—Package of 5
BO 153866	13440	Sprocket—Dial sprocket—less gear
BO 153867	13441	Switch—"On-Off" operating switch
BO 151725	4285	Washer—"A" lead connector, fuse connector or lamp socket insulating washer—Package of 10
BO 153868	13552	Washer—Felt washer for dial sprocket shaft—Package of 10
		MISCELLANEOUS ASSEMBLIES
BO 152136	4287	Body—Antenna connector body—Package of 10
BO 152137	12253	Bolt—5/16—18 x ¾" hex. head bolt with lockwasher for receiver mounting—Package of 10
BO 152138	4288	Cap—Antenna or "A" lead connector cap—Package of 10
BO 153913	12665	Capacitor—0.25 mfd.—antenna capacitor
BO 151402	11447	Capacitor—0.25 mfd.—gas gauge capacitor
BO 152021	12256	Capacitor—0.25 mfd.—temperature gauge capacitor
BO 152022	12255	Capacitor—0.5 mfd.—generator capacitor
BO 153914	13424	Cover—Receiver housing top cover with escutcheon assembled
BO 153915	13425	Cover—Receiver housing bottom cover
BO 153871	13382	Fastener—Plug fastener for receiver top cover—Package of 10
BO 151726	4286	Ferrule—Antenna ferrule and bushing—Package of 10
BO 153916	13423	Housing—Receiver housing complete with top and bottom covers
BO 152143	12250	Lead—Shielded antenna cable—chassis end with section of connector
BO 152144	12251	Lead—"A" lead—complete with male section of connector (chassis end)
BO 153917	13427	Screen—Speaker grille cloth and screen
BO 152146	12252	Screw—No. 8 self-tapping hex. head screw—used on receiver housing—Package of 10
BO 151724	4284	Spring—Antenna connector spring—Package of 10
BO 151399	11446	Suppressor—Distributor suppressor
BO 151725	4285	Washer—Antenna connector insulating washer—Package of 10
		REPRODUCER ASSEMBLIES
BO 153918	12482	Board—Reproducer terminal board
BO 153919	12450	Coil—Field coil (L16)
BO 153920	12451	Cone—Reproducer cone (L12)
BO 153921	9687	Reproducer—Complete

SERVICE TEST EQUIPMENT

RCA CATHODE RAY OSCILLOGRAPH

The RCA Cathode Ray Oscillograph is a complete self-contained unit designed for service and experimental applications. It includes two power supplies (one for the Cathode Ray Tube and one for the amplifier), vertical and horizontal amplifiers, saw-tooth timing frequency generator and six tubes, including the RCA-906 Cathode Ray Tube (3-inch).

Through the use of two wide-frequency-range high-gain amplifiers, the sensitivity is guaranteed at 2 volts d-c per inch for both vertical and horizontal deflection. The amplifiers have flat frequency characteristics between 20 and 90,000 cycles ± 10 percent. The amplifier gain is approximately 40.

A linear saw-tooth timing-frequency oscillator with a special synchronizing circuit is an integral part of the RCA Oscillograph. The frequency range extends from 20 to 15,000 cycles and permits the examination of a single cycle up to 15,000 cycles or the examination of six cycles up to the limit of the amplifier—90,000 cycles.

Stock No. 9545. . . . . **Net Price $84.50**

RCA TEST OSCILLATOR—TMV-97-C

The RCA Test Oscillator, Model TMV-97-C, is a wide frequency range test oscillator designed primarily for service applications. A copper shielded coil unit gives unusually low leakage, even on the high frequency bands while the output control permits wide variations in output up to 2 milliwatts. The frequency range extends from 90 to 25,000 kc. by means of eight overlapping bands. The frequency range is covered entirely by a fundamental frequency, no harmonics being used. A direct reading dial is guaranteed accurate ± 3% while individual factory calibration, accurate to ± 1%, is available at an additional cost of $5.00.

Other features include a modulation switch and jack for operating either with or without 400 cycle modulation or with external modulation if desired. A jack is connected across the main tuning capacitor which permits ready connection of a Frequency Modulator for oscillograph operation. Operation as a heterodyne frequency meter is also secured by plugging headphones into the modulation jack and placing the modulation switch at the unmodulated position. Stock No. 9595. . . . . **Net Price $34.50**

RCA FREQUENCY MODULATOR

Align your circuits visually with this new RCA Frequency Modulator and the RCA Cathode Ray Oscillograph. Sweeps the r-f voltage of your test oscillator over the resonant frequency of the circuit under test and generates an a-c synchronizing voltage simultaneously. Quick, accurate alignment, just like factory production, is quickly done, eliminating all possibility of error. Motor-driven, balanced tuning capacitor of two ranges and a-c generator driven from same shaft, thereby eliminating screen flicker.

SPECIFICATIONS

Tuning Capacitor—Two sections—each 35 mmfd. Panel switch for connection of either one or both to output. Variable sweep range 22.5 mmfd. or 45 mmfd.

Connecting Cable—14-inch low-capacity connecting cable with plugs.

Generator Frequency—Two cycles per revolution permit positive synchronizing for double-sweep alignment.

Generator Voltage—1.5 volts minimum.

Motor—Repulsion induction type—1550 R.P.M.

Panel Controls—"Hi-Lo" capacity switch, "On-Off" switch, output binding posts and single-circuit jack. Stock No. 9558. . . . . **Net Price $27.50**

RCA TUNING WAND

The RCA Tuning Wand is a special alignment tool which makes possible the checking of alignment in all-wave receivers without disturbing the adjustment of the trimmer capacitors. The tool consists of a bakelite rod having a brass cylinder at one end and a special finely divided iron core at the other end. Inserting the brass cylinder into a coil lowers its inductance, while inserting the iron increases the inductance. Stock No. 6679. **Net Price $1.10**

RCA ALIGNMENT TOOL

The RCA Alignment Tool is a bakelite shaft combination screw driver and socket wrench. The metal screw driver bit is so shaped that the increase in capacity caused by its touching a trimmer screw is offset by the reduction in inductance caused by its shape. The bakelite shaft is 7/32" in diameter, which gives entrance to ¼" holes, used on older model Radiola receivers.

Stock No. 4160. . . . . **Net Price $0.60**

RCA MANUFACTURING CO., INC., PARTS DIVISION, CAMDEN, N. J.

First Edition

Printed in U. S. A.

1937 Hudson Terraplane Brakes

Hydraulically Controlled Duo-Servo Single Anchor Type With Mechanical Follow-up

The hydraulic system consists of a compensating type master cylinder mounted on the Clutch and Brake pedal bracket and operated by an adjustable link from the brake pedal, four double piston wheel cylinders mounted on the brake backing plates and the connecting tubing.

When the brake pedal is depressed, fluid is pushed out of the master cylinder into the wheel cylinders, separating the wheel cylinder pistons, expanding the brake shoes and applying the brakes. When the foot is removed from the pedal the brake shoe springs return the wheel cylinder pistons to their normal position, forcing the fluid back through the lines into the master cylinder.

The rear wheel brakes are also connected for mechanical operation through cable and conduit connections to the hand brake and the foot pedal. The mechanical linkage from the foot pedal is such that it follows the hydraulic actuation and becomes effective only if the hydraulic system fails.

The hand brake is located under the instrument panel to the left of the steering column and is of the direct action type. The hand brake is applied by pulling the handle back. It will remain locked in position until the handle is turned to the right to release the lock dog from the handle ratchet.

The movement from both the hand brake and the foot pedal is transmitted to a rotary equalizer, mounted under the frame "X" member, to which the rear brake operating cables are also attached. An adjustable pedal push rod (5), Figure 1, provides an adjustment for determining the amount that the mechanical application of the rear brakes will lag behind the hydraulic application. Normally only hydraulic application is made when the foot pedal is depressed.

THE MASTER CYLINDER

Description

The master cylinder, Figure 2, consists of a supply tank cast integral over the master cylinder proper, in which compensating features are incorporated.

This unit performs two supplementary functions. The first of these is to maintain a constant volume of fluid in the system at all times, regardless of expansion (heat) or contraction (cold). The second supplementary function is its action as a pump during the bleeding operation.

The return to released position of piston (2), Figure 2, and cup (4) under the action of spring (9) is much faster than the return of the fluid through outlet (10) into the master cylinder. This creates a momentary vacuum in the cylinder barrel and additional fluid is drawn into the system from the reservoir through the drilled holes in piston (2) and past the lip of cup (4). The pressure exerted on the fluid by the brake shoe retracting springs is sufficient to lift valve (16) off its seat to permit the fluid from the lines to return into the master cylinder. Any excess is returned by port (3) into the reservoir; thus we have a cylinder full of fluid for the next brake application.

It is imperative that rod (1), Figure 2, which is attached to brake pedal operating rod, be adjusted for clearance where it seats in piston (2), so that there is ¼" free movement of brake pedal pad before the pressure stroke starts. This will permit cup (4), Figure 2, to be clear of port (3) when piston (2) is in its released position; otherwise the excess fluid drawn into the master cylinder on the return stroke of the piston, will not be allowed to return to the reservoir and the brakes will drag.

Secondary cup (5) prevents fluid from leaking out of master cylinder into boot (7). Supply tank filler cap (11) is conveniently located, accessible under the left side of engine hood for checking fluid level. Supply tank should be kept at least half full of fluid. *CAUTION: Before removing supply tank filler cap (11) Figure 2, extreme care must be used to prevent dirt from entering the master cylinder.*

The use of other than Genuine Hudson Hydraulic fluid or the introduction of oil with a mineral base into the system will cause the rubber parts to swell and become inoperative. Grit and abrasive substances permitted to enter into the fluid reservoir will cause the cylinder barrel to become scratched and pitted. When either of these conditions occurs it becomes necessary to remove master cylinder for inspection.

Disassembly

After removing the master cylinder from the car, the unit is disassembled as follows:

Remove large boot strap (12), Figure 2, that fastens boot to cylinder casting. This permits removal of boot, link and small boot strap. With a sharp-pointed screwdriver, remove retainer spring (13) from its groove. This permits the removal of internal parts. Rubber parts and cylinder bore are then checked.

If inspection shows cylinder walls scratched or pitted it becomes necessary to have the cylinder walls honed to renew the highly polished surface necessary for efficient operation. All Wagner Branches have the equipment necessary to recondition cylinders.

After cylinder has been honed and new cups procured it is recommended that reassembly be made in the following manner:

Wash castings and parts in *clean alcohol*, dip casting and parts in Genuine Hudson Hydraulic fluid for

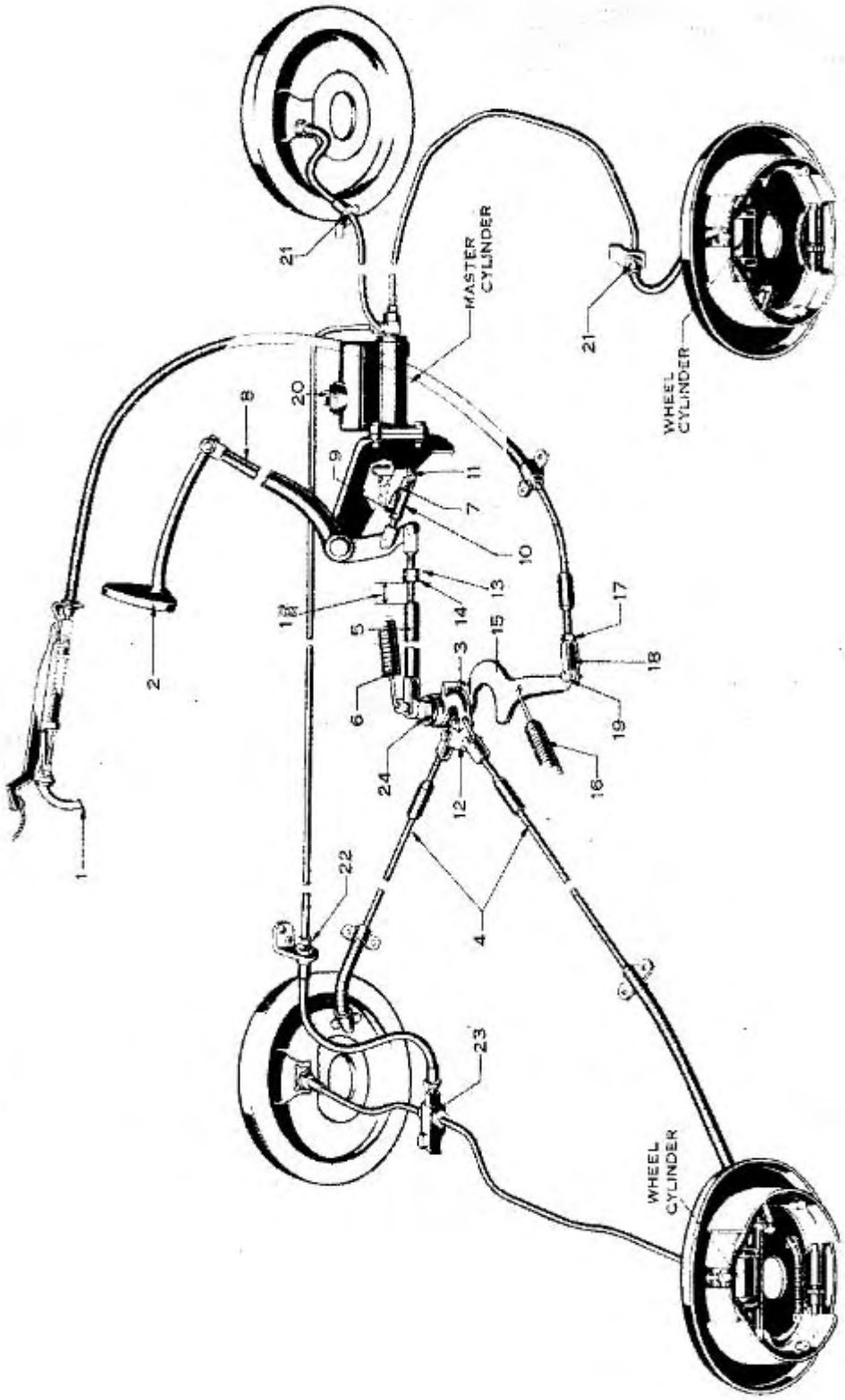
MASTER CYLINDER
WHEEL CYLINDER
WHEEL CYLINDER
1
2
3
4
5
6
7
8
9
10
11
12
13
14
15
16
17
18
19
20
21
21
22
23
24

Figure 1

lubrication purposes. Install valve (16) and return spring (9) as shown in Figure 2. Assemble primary cup (4), piston assembly (2) and piston ring (8). Snap retainer spring (13) in groove. Assemble boot (7) and rod (1) in place and replace large boot strap (12). Unit is now ready for installation on car.

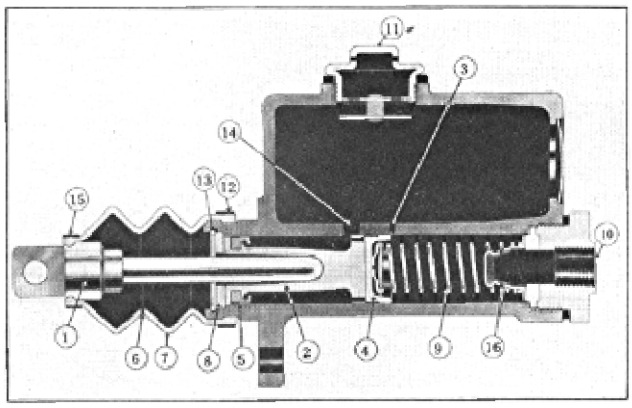

Figure 2

WHEEL CYLINDER

Description

The wheel cylinder is the unit which changes the applied hydraulic pressure into mechanical force. The wheel cylinder, Figure 3, is composed of casting (1), boots (2), opposed pistons (3), opposed cups (4), and cup return spring (5). At the uppermost position and between the piston cups is a bleeder connection used to expel air from the system.

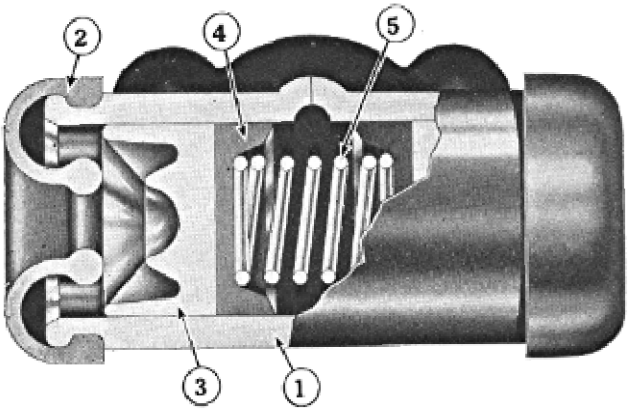

Figure 3

Wheel Cylinder Inspection

To remove wheel cylinder for inspection, honing or repairs:

Disconnect front tube from hose at frame bracket. Remove hose lock nut (21), Figure 1, at frame bracket. Remove the two cylinder fastening screws (G), Figure 4, on rear of shield. Place piston clamp on wheel cylinder as shown in Figure 5. Remove brake shoe retracting springs (3-5-15), Figure 6, which permits shoes to move outward. Remove connecting links (12) between cylinder pistons and brake shoes. Cylinder and hose may be withdrawn as a unit.

Disconnect rear tube from cylinder fitting. Remove the two cylinder fastening screws (G), Figure 4, on rear of shield. Place piston clamp on wheel cylinder as shown in Figure 5. Remove brake shoe retracting springs and connecting links. Cylinder may then be withdrawn.

Disassembly

To disassemble wheel cylinder (Figure 3), remove

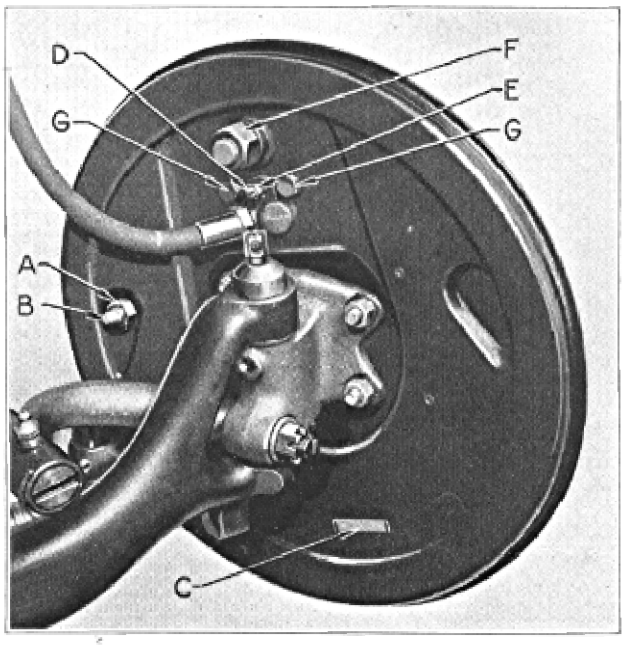

Figure 4

rubber boots (2). Pistons (3), cups (4), and spring (5) may then be removed for inspection. Cylinder walls

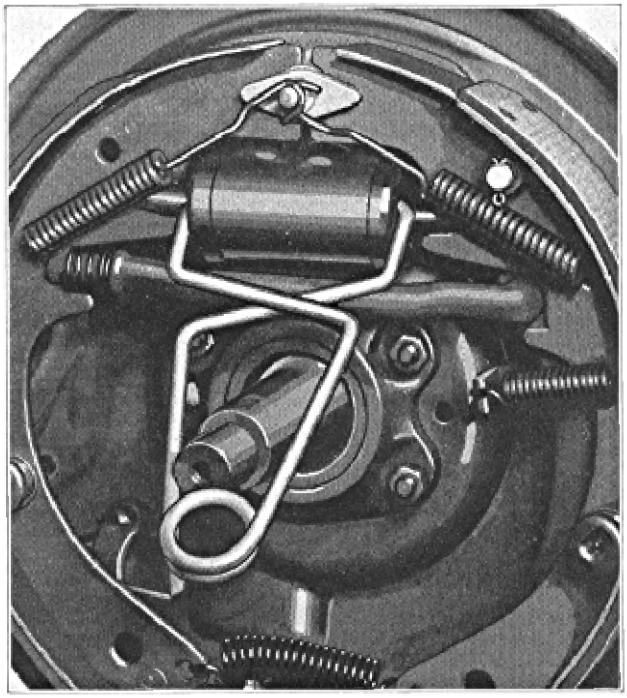

Figure 5

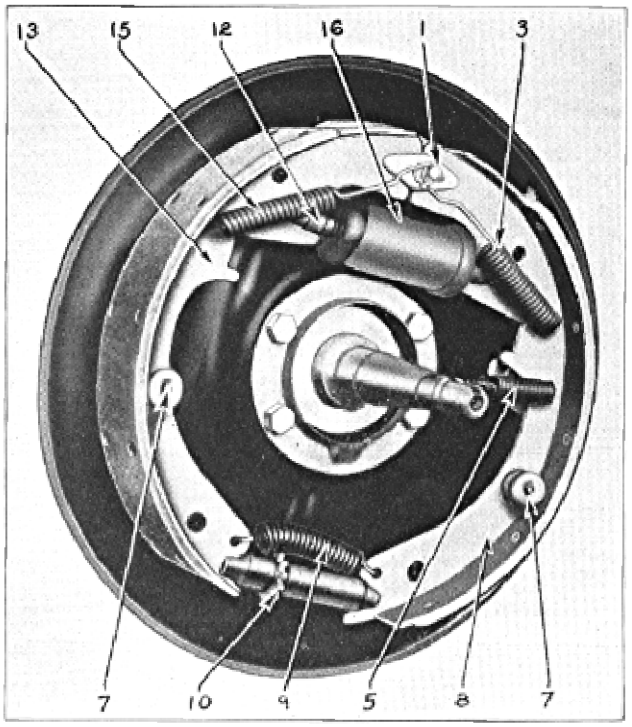

Figure 6—Front Brake Assembly

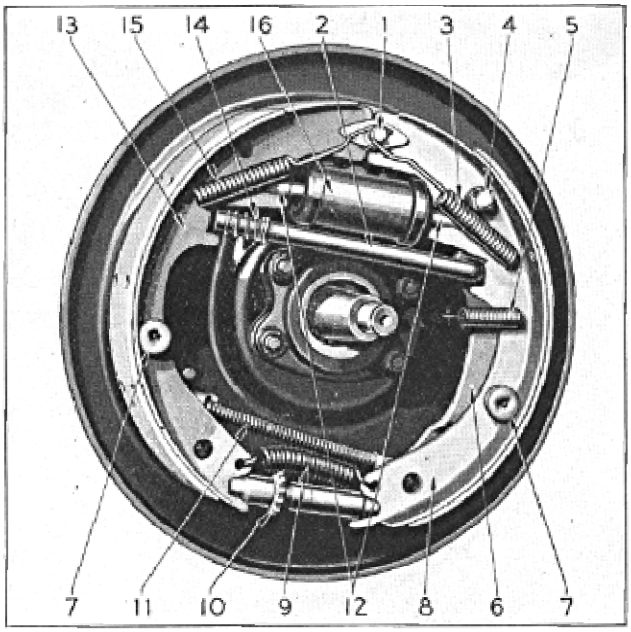

Figure 6—Rear Brake Assembly

1. Anchor Pin
2. Parking Brake Link
3. Secondary Shoe Retracting Spring
4. Parking Brake Lever Pivot
5. Eccentric Spring
6. Parking Brake Lever
7. Shoe Hold-down Spring
8. Secondary Shoe
9. Adjusting Screw Spring
10. Adjusting Screw
11. Parking Brake Cable
12. Wheel Cylinder Link
13. Primary Shoe
14. Parking Brake Link Spring
15. Primary Shoe Retracting Spring
16. Wheel Cylinder

may also be checked at this time for scratched or pitted surface.

Before reassembling cylinder all parts must be washed in clean alcohol. Dip all parts in Genuine Hudson Hydraulic Fluid and reassemble as shown in Figure 3.

BLEEDING THE LINE

Description

Whenever a main pipe line is removed from the master cylinder or the supply tank becomes empty, then the brake system must be bled at all four wheels. Whenever a line is disconnected from any individual wheel, then that wheel cylinder ONLY must be bled. The bleeding operating should be performed at only one wheel cylinder at a time and repeated at the other wheel cylinders, if necessary.

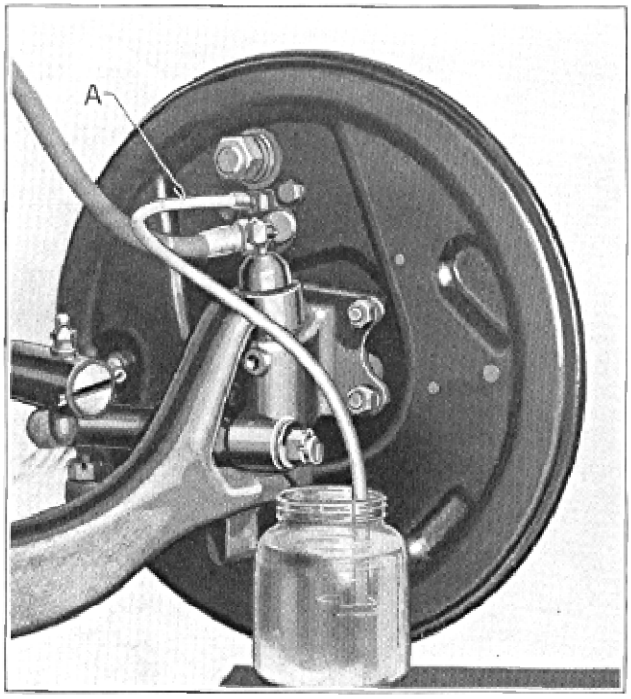

Figure 7

Fill the filling bottle (J-713-C), Figure 9, with Genuine Hudson Hydraulic brake fluid and screw adapter into master cylinder filler plug hole. Put nozzle in reservoir and open filler bottle valve before starting this operation. This will keep tank half full of fluid during bleeding operation. If the filling bottle is not used, fill the reservoir with Genuine Hudson Hydraulic fluid and keep at least half full during bleeding operation.

Remove screw (D), Figure 4, from end of bleeder valve and attach bleeder tube (A), Figure 7. Allow tube to hang in clean container, such as a pint mason jar. Unscrew bleeder valve (E, Figure 4), three-quarters of a turn and depress foot pedal by hand, allowing pedal to return to released position slowly. This gives a pumping action which forces fluid through tubing and out at wheel cylinders, carrying with it any air that may be present.

Caution:

After brake pedal is depressed, it must be allowed to return slowly; otherwise air may be drawn into system.

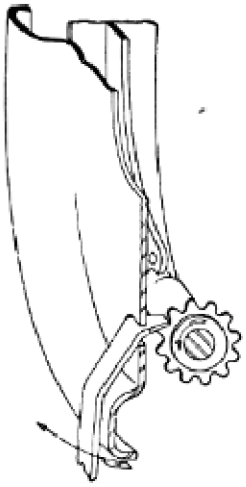

Figure 8
Move Wrench in Direction of Arrow to Tighten Brakes

Watch flow of fluid from hose (the end of which should be kept below surface of fluid in pint jar) and when air bubbles cease to appear, close bleeder connection.

Fluid withdrawn in "bleeding" operation should not be used again. Fluid should be replenished in supply tank after each cylinder is bled if filling bottle (J-713) is not used. Should supply tank be drained during bleeding operation, air will enter the system and "rebleeding" will then be necessary *at all four wheels*. When bleeding operation is completed, supply tank must be refilled. Inspect for correct fluid level each one thousand miles.

Adjustment of Brake Pedal

Check to see that the pedal return spring holds the right end of lever (7), Figure 1, against the stop. If the pedal shank touches the toe board in the fully released position or has more than ½" clearance, loosen lock nut (9), Figure 1, on the cylinder connecting link. Remove clevis pin (11) from right end of lever (7). Turn connecting link to increase length until clevis pin (11) just enters the rod with the pedal shank ¼" from the toe board and the lever (2) against its stop. Reinsert clevis pin (11) in bottom of bell crank (7) and tighten lock nut (9).

Adjustment of Pedal Push Rod

With equalizer bar (3) against stop, loosen lock nut (13) and turn adjusting nut (14) until rear face is 1 29/64 inches from front end of push rod (5) as shown in Figure 1. Tighten lock nut. This adjustment is important to obtain proper mechanical follow-up to the hydraulic operation of the rear brakes.

Brake Shoe Adjustment

There are only two points of adjustment in the braking system to compensate for brake lining wear. The *Eccentric Adjustment* (B), Figure 4, centralizes the brake shoes in the drum. The *Adjusting Screw* (10), Figure 6, takes up the clearances between the lining surfaces and the brake drums.

Adjustment for Wear Only

(1) Jack up all wheels clear of the floor.

(2) Remove clevis pins which attach rear wheel cables to equalizer bar.

(3) After uncovering adjusting holes (C), Figure 4, and feeler gauge holes in brake drums, AT EACH WHEEL: Loosen eccentric lock nut (A) and insert .010" feeler gauge between the lining of secondary (eccentric controlled) shoe and brake drum. Turn the eccentric adjustment (B) in the direction of forward wheel revolution until .010" feeler is just snug at anchor and adjusting ends of secondary shoe. Tighten eccentric lock nut.

The clearance at both ends of secondary shoe should not vary more than .003". Should the variation be greater than this it will be necessary to relocate the anchor pin as outlined in paragraphs 10 to 17. (In case of clearance variation it is desirable that clearance at the anchor end be less than at the adjusting end.) DO NOT ADJUST THE ANCHOR PIN UNLESS THIS INSPECTION SHOWS IT NECESSARY.

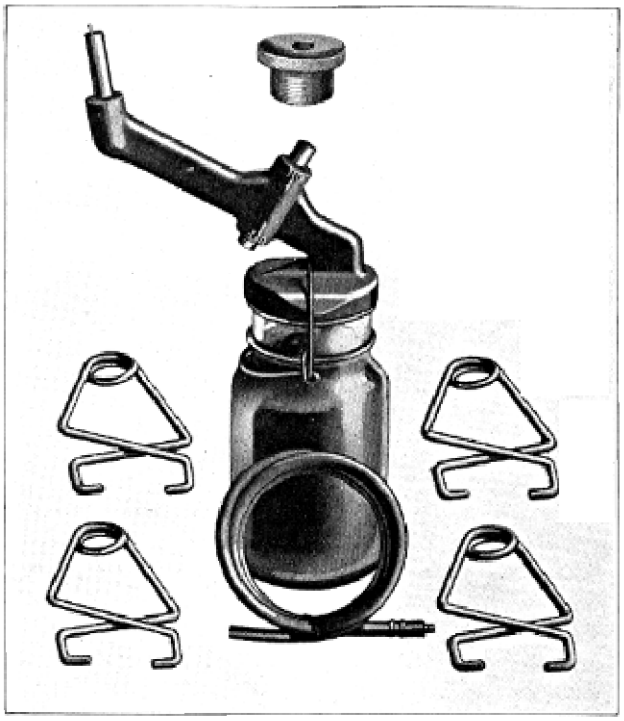

Figure 9
J-713-C Filler bottle
J-628 Bleeder assembly
HMO-145 Wheel cylinder clamps (set of four)
Order tools from Hinckley-Myers Company, Jackson, Mich.

(4) Spread the brake shoes by means of the notched adjusting screw (Figure 8) until the shoes are expanded against the brake drum so drum can just be turned by hand.

(5) Pull hand brake lever out one notch and adjust clevis (18) until equalizer bar plate (12) is ⅛" from stop, Figure 1.

(6) Pull rear brake cables tight and adjust ends so clevis pins just enter holes in plate. The rear face of the equalizer plate must be parallel to the face of the stop after this adjustment is made.

(7) Release hand brake.

(8) Release adjusting screw at each wheel until the brakes are just free of drag and replace feeler gauge hole covers and wheels.

(9) Lower car and test for balance of hand brake on brake testing machine or road. The adjusting screws can be turned two or three notches to balance the mechanical operation without affecting the balance of the hydraulic operation. *Always loosen adjusting screw on tight brakes rather than tighten adjusting screw on loose brake to get balance.* This is to safeguard against one or more dragging brakes.

Complete Brake Adjustment

(Including lubrication of rear brake cables.)

NOTE: This complete brake adjustment is to be followed in cases where an inspection as covered in paragraph 3, shows that adjusting for lining wear only will be inadequate, or where new shoes have been installed.

(10) When a complete brake adjustment is required it is recommended that all brake drums be removed and brakes cleaned and inspected as to lining condition. After cleaning with a stiff brush and air hose, Bendix Lubriplate grease should be lightly applied to parking brake cable ramp, shoe support ledges on backing plate, eccentric, shoe ends and all moving parts at frictional contact points.

(11) During inspection or disassembly of brakes, the hydraulic portion of the system should be left intact so that bleeding of the lines will not be required. This is easily accomplished by putting HMO-145 wheel cylinder clamps on the wheel cylinders, Figure 5, before disconnecting the brake shoe retracting springs. The brake pedal must NOT be depressed at any time when brake drums are not in place.

(12) Anchor pins are sliding, or radially adjustable. After the car has been jacked up, and the drums and shoes removed and reinstalled as recommended, continue as follows:

(13) Disconnect rear brake cables at the equalizer bar.

(14) When lubricating cable and conduit assemblies, be careful not to force excess lubricant into the brake assembly. Unfasten conduit abutment brackets and remove bolt which attaches conduit to rear spring. Clean exposed portion of cable, slip conduit toward cross shaft, exposing that portion of cable which is normally sheathed by conduit. Clean this portion of cable and lubricate freely with Bendix cable lubricant.

(15) Reassemble conduits, leaving equalizer bar clevises disconnected. Conduit ends MUST BE FIRMLY BOTTOMED IN ABUTMENT BRACKETS.

(16) At all four wheels, loosen the anchor pin nut one turn and tap anchor pin slightly in necessary direction with a soft hammer, turning the eccentric in the direction of forward wheel rotation to give the specified clearances of .010" at the adjusting screw end and .010" at the anchor end of the shoe against which the eccentric operates. TIGHTEN THE ANCHOR PIN NUT AS TIGHT AS POSSIBLE WITH A 16-INCH WRENCH. Tighten eccentric lock nut.

(17) Continue adjustment as outlined in paragraphs 4 to 9, inclusive.

Brake Maintenance Hints

1. Pedal Goes to Floor Board.

Cause:

a. Normal wear of lining.
b. Leak in system.
c. Air in system.
d. No fluid in supply tank.

Remedy:

a. When brake linings become worn it is necessary to set the shoes into closer relation to brake drums. This condition is usually accompanied by the remark from the driver that it is necessary to PUMP the pedal several times before a brake is obtained. Shoes should be set to .010" clearance. Do not disturb anchor pins when making this adjustment. *Adjustment must be made while drums are cool.*

b. A connection leak in the system will allow the pedal, under pressure, to go to the toe board gradually. A cup leak does not necessarily result in loss of pedal travel, but will be indicated by a loss of fluid in the supply tank. If no leaks are found at wheels or connections, remove master cylinder and check bore of barrel for score or scratches.

c. Air in the system will cause a springy, rubbery action of the pedal. Should a sufficient quantity be introduced into the system, the pedal will go to toe board under normal pressure. System should be bled.

d. The fluid level in the supply tank should be checked. Should the tank become empty, air will be introduced into the system, necessitating bleeding.

2. All Brakes Drag.

Cause:

a. Mineral oil in system.
b. Port hole (3), Figure 2, closed.

Remedy:

a. The introduction into the system of any oil of a mineral base, such as engine oil, kerosene, or the like, will cause the cups to swell and distort, making it necessary to replace all rubber parts. Flush system with alcohol and refill with Genuine Hudson Hydraulic brake fluid.

b. Directly ahead of the master cylinder piston cup (when in normal release position) is a relief port. It is imperative that this port be open when the brakes are released. Should this port (3), Figure 2, be blocked by piston cup not returning to its proper release position, the pressure in the system will gradually build up and the brakes drag.

3. One Wheel Drags.

Cause:

a. Weak brake shoe return spring.

b. Brake shoe set too close to drum.

c. Cups distorted.

d. Loose wheel bearings.

Remedy:

a. Replace spring.

b. Readjust shoes to proper clearance.

c. If in repairing wheel cylinders, kerosene, gasoline and other fluids are used as a cleaner instead of alcohol, the cups will swell and distort. The return action of the shoes will be retarded and the brake drum will heat. Replace cups and wash unit in alcohol and dip all parts in Hudson Hydraulic brake fluid before reassembling.

d. Tighten bearings.

4. Car Pulls to One Side.

Cause:

a. Oil-soaked lining.

b. Shoes improperly set.

c. Backing plate loose on axle.

d. Different makes of lining.

e. Tires not properly inflated.

f. Incorrect caster angle.

Remedy:

a. Replace with new Hudson lining of correct type. Grease-soaked linings cannot be salvaged by washing or cleaning.

b. The construction of the brake is such as to cause a slight pull or drift if shoes are improperly set on the front wheels. On the rear wheels there will be no drift noticed, but one wheel will slide before the other. Readjust the shoes to proper clearance.

c. Loose backing plate permits the brake assembly to shift on the locating bolts. This shifting changes the predetermined centers and causes unequal efficiency. Tighten backing plates and readjust shoes.

d. Different makes of linings have different braking efficiency. Two different makes, one with high efficiency and one with low efficiency would cause car to pull to one side. Use Genuine Hudson brake lining.

e. All tires should be properly inflated.

f. Check front axle for caster.

5. Springy, Spongy Pedal.

Cause:

a. Brake shoes not properly adjusted.

b. Air in system.

Remedy:

a. Adjust brakes.

b. Consult remedy "d" under No. 1.

6. Excessive Pressure on Pedal, Poor Stop.

Cause:

a. Brakes shoes not properly adjusted.

b. Improper lining.

c. Oil on lining.

d. Lining making partial contact.

e. Improper adjustment of pedal rod (5), Figure 1.

Remedy:

a. Adjust brakes.

b. Replace with new linings of same type, as improper grades of brake linings lose their gripping qualities after a few thousand miles. As the frictional quality decreases, the pressure on the brake pedal is naturally increased to get the equivalent stop.

c. Clean or replace lining.

d. Remove high spots.

e. Adjust nuts (13) and (14), Figure 1, as covered under "Adjustment of Pedal Push Rod."

7. Light Pressure on Pedal, Severe Brakes.

Cause:

a. Brakes shoes not properly adjusted.

b. Loose backing plate on axles.

c. Grease-soaked lining.

Remedy:

a. Adjust brakes.

b. Consult remedy "c" under No. 4.

c. Consult remedy "a" under No. 4.

CAUTION:

DON'T use a substitute for Hudson Hydraulic brake fluid. Substitutes are not suitable for this system.

DON'T allow grease, paint, oil or brake fluid to come in contact with brake lining.

DON'T clean rubber parts or inside of cylinders with anything but clean alcohol. Don't use kerosene or gasoline.

DON'T reline one wheel with a different type of lining than is used on the others, as you cannot expect satisfactory brake performance if this is done.

DON'T allow the supply tank to become less than half full of brake fluid.

DON'T attempt to salvage used brake fluid.

Use Genuine Parts

All parts, brake fluid and brake linings are to be obtained from the Hudson Motor Car Company and all complaints and problems reported to its Service Department through Hudson distributors.

Genuine parts will carry Wagner and Lockheed names and no others should be used.

You may be solicited to purchase substitutes for the above items, the use of which may result in unsatisfactory, unsafe brakes and the voidance of the Hudson warranty.

Brake Fluid

Hudson Hydraulic brake fluid is prepared by the Wagner Electric Corporation, manufacturers of Lockheed Hydraulic brakes, with an exact knowledge of the requirements and the dangers of substitution.

It is therefore important to use only Genuine Hudson Hydraulic fluid and thus avoid damage to brake system.

Hudson Hydraulic brake fluid is put up in convenient containers and should be secured through the Hudson Parts Department.

Brake Service Tools

The tools required to properly service 1937 Hudson and Terraplane brakes are few and not expensive. They are, however, essential from a standpoint of time-saving and in the hydraulic system of preventing contamination of the brake fluid.

J-713-C Filler Bottle—Price $4.20

The oil level should never be allowed to get below the half full point in the master cylinder reservoir. If the reservoir is filled too full, fluid will be lost, due to expansion.

The filler bottle will fill the reservoir to the correct level—no more. Just screw adapter into the reservoir opening, insert the neck of the bottle and push the valve open. When air bubbles cease to appear in the bottle the reservoir is full. Saves time—saves fluid.

When bleeding lines, leave the filler bottle neck in the reservoir. As fluid is bled out it will be replaced from the bottle. This prevents the possibility of draining the reservoir which would require rebleeding of all lines.

J-628 Bleeder Tube Assembly—Price $0.35

This tube prevents brake fluid from getting on brake parts during the bleeding operation. By putting the end of the tube below the level of liquid in a glass container the air bubbles rising to the surface as the brake pedal is depressed indicates that air is in the line and continued bleeding is necessary.

HMO-145 Wheel Cylinder Clamps (Set of Four)—Price $0.80

When the brake shoe retracting springs are removed the spring in the wheel cylinder will separate the pistons. This will cause a vacuum which will cause air to be drawn in around the piston cups and require bleeding of the lines. The wheel cylinder clamps have sufficient tension to hold the pistons together and should always be put in place before the shoe retracting springs are removed.

HM-13985 Eccentric and Star Wheel Wrench—Price $0.20

This tool will speed up the adjusting of the eccentric and the shoe adjustment.

J-784 Anchor Pin Wrench—Price $1.40

This is a strong alloy steel box wrench with plenty of purchase to tighten the anchor pin nuts securely.

Place tool orders with the Hinckley-Myers Company, Jackson, Michigan.

Front Axle Alignment

Steering Gear and Spring Suspension

The front axle, the steering gear and the spring suspension are all important factors in obtaining proper handling of an automobile. Because of their relation in this respect they should all be treated together in service operations. The servicing of these units will be divided into four sections as follows:

Section 1. Disassembly, repair and reassembly of front axle.

Section 2. Removal, disassembly, reassembly and installation of springs and stabilizer.

Section 3. Disassembly, repair, reassembly and adjustment of steering gear.

Section 4. Front wheel alignment and steering corrections.

Sections 1, 2 and 3 deal with the operations pertaining to the units individually, while Section 4 deals with the inter-related effects and final adjustment for correct steering and roadability.

SECTION 1—FRONT AXLE

Removal of Front Axle

1. Jack up front of car with a roller jack under the front axle and place two stand jacks under the frame side rail just back of the torque arm-frame brackets. Lower roller jack until car weight is held on stand jacks but leave roller jack in place to support front axle.

2. Pry off front wheel outer and inner hub caps, pull spindle nut cotter keys.

3. Remove spindle nuts, spindle washer, outer bearing cage and front wheels and brake drum assemblies.

4. Remove nuts from four bolts holding brake backing plate to spindles.

5. Remove brake backing plates and hang on fender supports with hooks made from heavy wire.

6. Remove cotter keys from inner ends of bolts (78) which attach torque arms (76) to frame brackets (75), remove nuts and press out bolts, using press J-885, Figure 2.

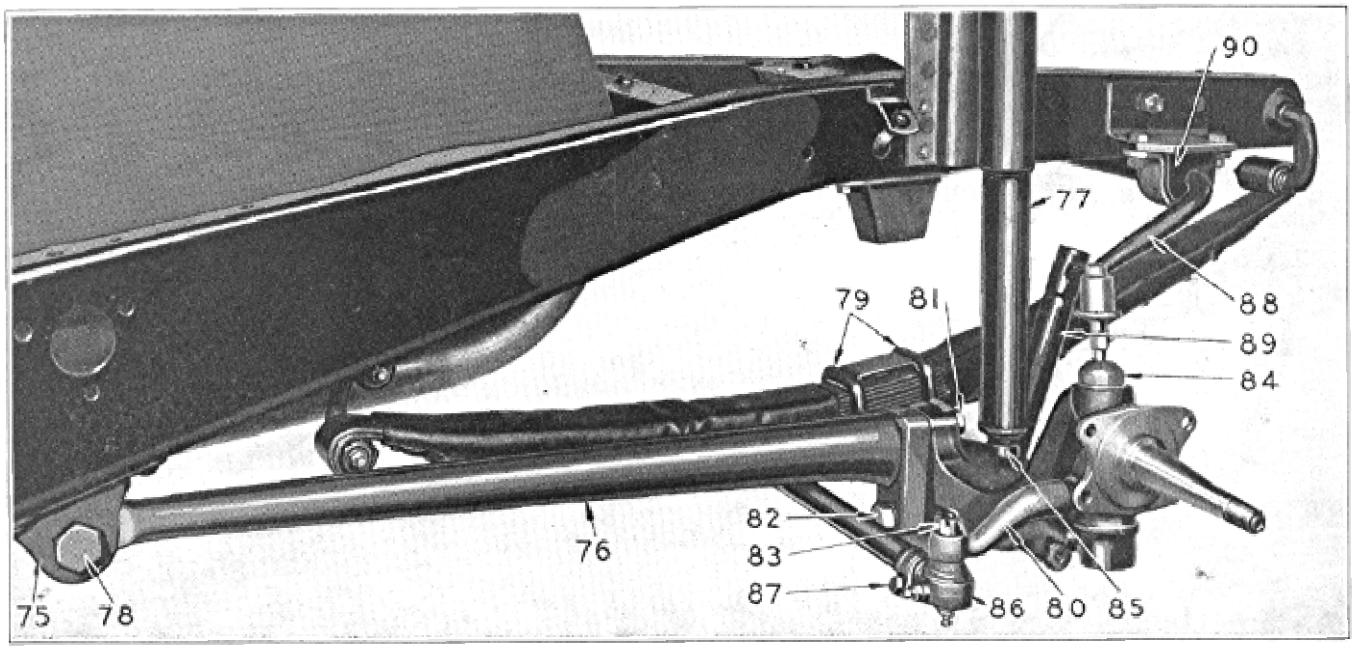

Figure 1

NOTE: Due to the rubber grommets clinging to the bolt a constant pressure is required to remove the bolt.

7. Remove nuts, grommet seats and grommets (85) from bottom shock absorber mounting studs.

8. Remove cotter key from front end of drag link, unscrew plug, remove ball seat and remove drag link from steering arm.

9. Remove nuts from spring U bolts (79) (4 each side) and remove stabilizer plates and spring seat caps.

10. Lower roller jack until axle is clear of spring and remove axle assembly from under car.

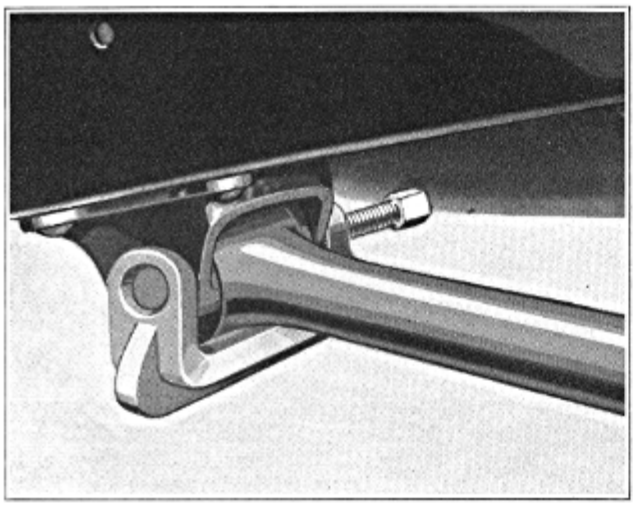

Figure 2

REBUILDING FRONT AXLE

Replacement of Spindle Pins and Bushings

NOTE: It is not necessary to remove the axle from under the car for this operation. This can be done by proceeding as follows either with the axle removed from the car or after operations 1 to 5 inclusive under removal of front axle. The special tools required are shown in Figure 3.

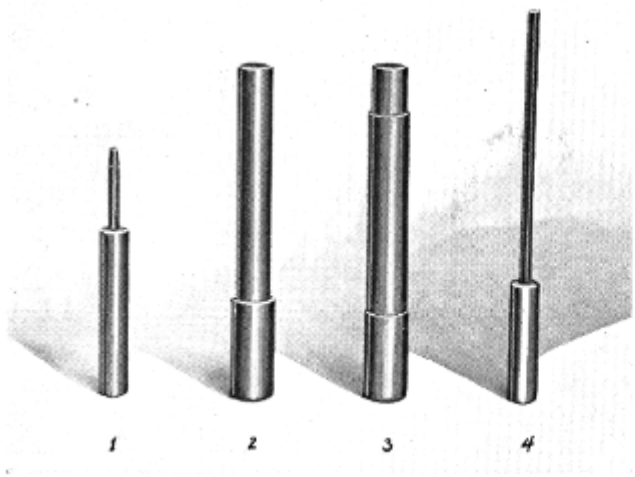

Figure 3

11. Remove tie rod and stud nuts (83, Figure 1), and disconnect tie rod from right and left steering arms.

12. Remove the cotter keys and nuts from the front ends of the steering arms (80, Figure 1) and remove the arms from the spindles.

13. Remove the oilers from the top of the pivot pin upper bushing (84, Figure 1).

14. Insert driver J-479-1 (1-Figure 3) through hole in upper bushing and drive spindle pin down, forcing out expansion plug at bottom of spindle, then insert driver J-479-2 (4-Figure 3) and drive pivot pin out.

NOTE: Remove spindle pin carefully so that the five ball bearings are not lost.

15. Support the axle end solidly and drive upper bushing out with a copper hammer.

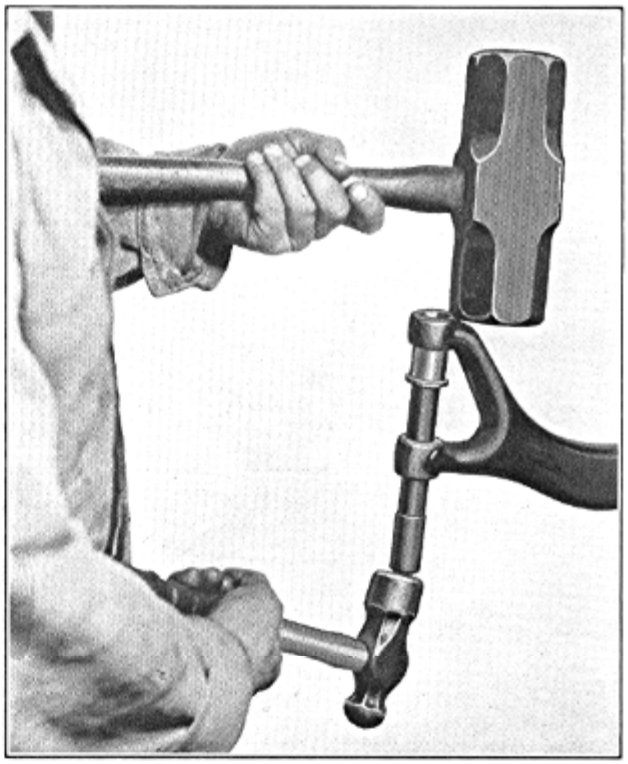

Figure 4

16. Insert driver J-469-2 (3-Figure 3) into lower bushing and drive it out.

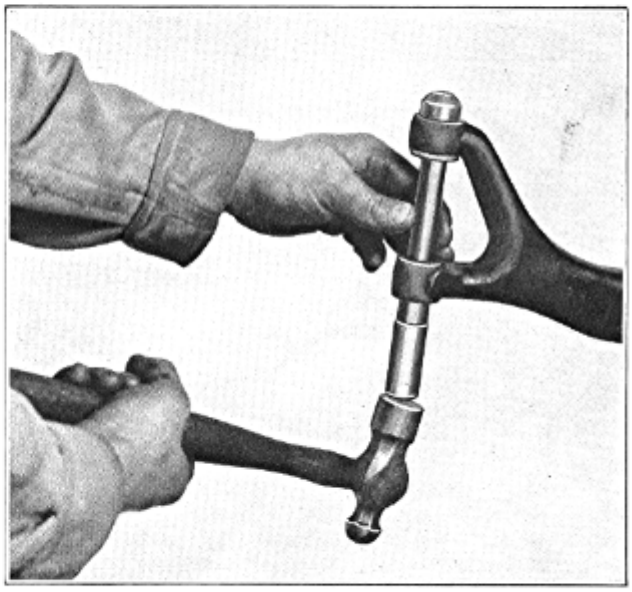

Figure 5

17. Install new upper bushing, using driver J-469-2 (3-Figure 3) as shown in Figure 4. The top of the axle center yoke must be well supported.

18. Install new lower bushing, using driver J-469-1 (2-Figure 3), as shown in Figure 5.

NOTE: The bushings are hardened and ground and require no reaming after being put in place. Lubricate inside of bushings and top of spindle pin with viscous grease before inserting spindle pin.

19. Put the spindle in place with sufficient shims under it to give an end play of .006 to .010 and insert spindle pin from bottom about ¾ of the way with the keyway in line with the keyway in the steering arm home in the spindle.

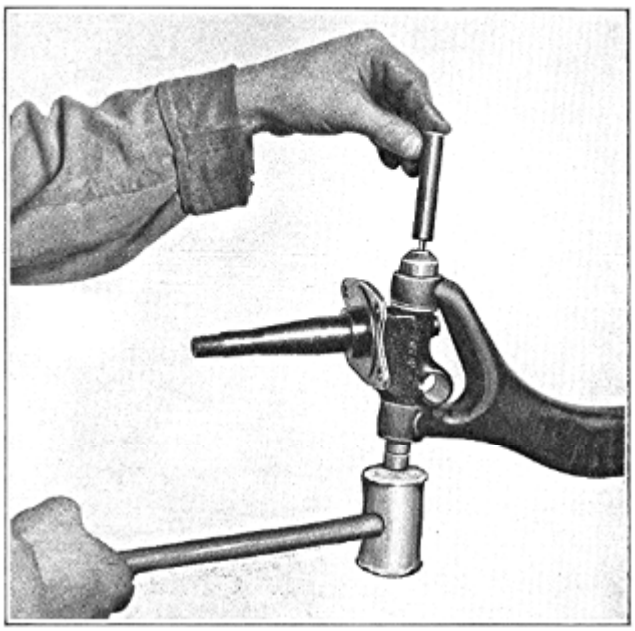

Figure 6

NOTE: This measurement must be taken without the seal in the groove in the top of the spindle (See Figure 7.)

20. Drop 5 new ball bearings through the pressure fitting hole in the top bushing and insert driver J-479-1 as shown in Figure 6 to insure keeping the balls on their race and drive the pin in until the keyways line up.

21. Assemble the steering arms to the spindle with keys and nuts. Tighten nuts securely and insert cotter keys.

NOTE: *Spindles must turn free without perceptible drag.*

22. Install expansion plugs in bottom of spindles.

23. Reinstall tie rod.

NOTE: *The tie rod ends should be free enough to permit the stud to be turned by grasping it with the hand. Replace worn or tight tie rod ends with new ones. After the tie rod has been installed a pressure of from 3 to 5 pounds applied to the ball of the left hand steering arm should turn the spindles. If greater effort than this is required, steering will be hard and an excess amount of caster may be required to overcome this drag to prevent car wander.*

Installation of Front Axle

24. Put axle assembly on roller jack and roll into position under car.

25. Lubricate the upper and lower halves of the spring seat, put upper halves in place on axle and raise axle into position under springs.

26. Put spring U bolts, lower halves of spring seats and stabilizer link lower plates in place and install nuts on U bolts (79-Figure 1).

NOTE: *Before installing jam nuts on U bolts lift rear end of torque arm. It should fall slowly under its own weight. Readjust U bolt nuts if necessary. Tight spring seat bearing will restrict spring action and cause hard riding, while with loose bearings the proper axle alignment cannot be held.*

27. Dip rubber grommets in gasoline and insert two in eye of each torque arm, and drive bracket bolts (78) through bracket (75) and grommets. Install nuts and insert cotter keys.

28. Connect drag link to steering arm and connect shock absorbers.

29. Install brake backing plates.

30. Lubricate the bearings of each wheel with 4 ounces of bearing grease and install wheel and brake drum assemblies and hub caps.

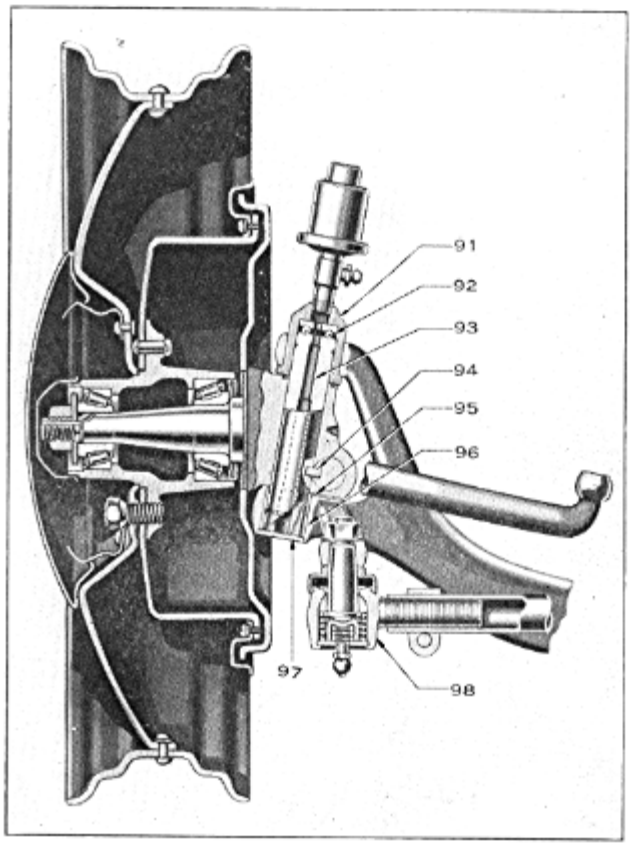

Figure 7

NOTE: The axle must now be checked for caster, toe-in and steering geometry. This is covered in Section 4.

SECTION 2—SPRINGS AND STABILIZER

Removal of Springs (front or rear)

The axle (front or rear) should be supported on a roller jack, while the chassis frame side rails should be supported on stand jacks.

31. Remove nuts from U bolts (79-Figure 1.)
32. Disconnect lower end of shock absorbers.
33. Raise or lower roller jack until axle is free of spring.
34. Unscrew frame bracket threaded bushing at front and rear of spring and remove spring from under car.

Disassembly of Spring

35. Clamp spring in vise so that center bolt is just outside of vise jaw.
36. Unscrew shackle threaded bushing.
37. Cut spring leaf clips and remove.
38. Remove center bolt nut and bolt.
39. Open vise and disassemble spring.

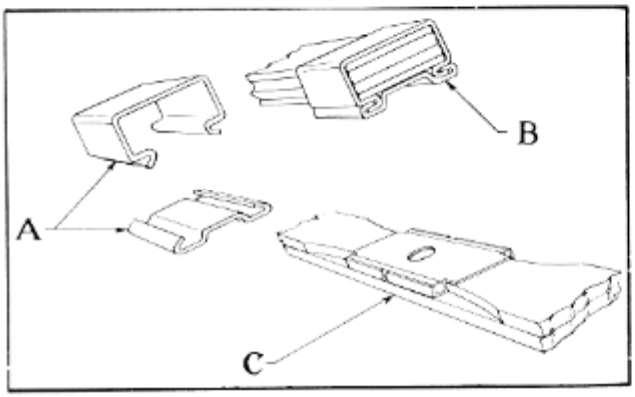

Figure 8

Assembly of Spring

NOTE: The second leaf of the front springs is made in two pieces. The outer end of each piece is formed around the eye of the main leaf, while the inner ends of each are guided by a plate (Sketch C), Figure 8, through which the center bolt passes. This place should be assembled between the second and third leaves with the flanges upward to guide the inner ends of the second leaf.

40. Lubricate leaves with viscous grease and assemble in proper order with a piece of ¼" rod passing through the center bolt hole of each leaf. Clamp in vise and draw leaves together, aligning them as the vise is tightened.

NOTE: The rear end of front and rear springs is the long end measured from the center bolt hole to the center of the spring eye. The rebound leaf of the rear spring is assembled to the rear. All leaves which are not equal length from the center bolt hole to both ends are assembled with the long end to the long end of the assembled spring.

41. Insert center bolt and tighten nut.
42. Put service spring clips (Sketch A), Figure 8, over spring leaves from top and slide clip cover in place on bottom (Sketch B), Figure 8.
43. Lock spring clip joints with a hammer.

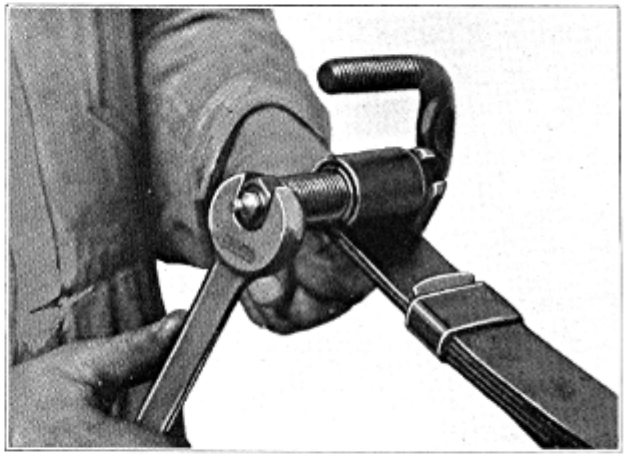

Figure 9

44. Insert one end of spring shackle through main leaf eye (front and rear of front spring and rear of rear spring) as shown in Figure 9, and start threaded bushing on shackle thread and draw tight into spring eye.

Install Spring on Car

45. Put spring in position under car with the shackles passing through the frame brackets.
46. Start threaded bushing on shackle and draw tight into bracket.
47. The front end of the rear spring is placed in the hanger and the bolt threaded in from the inside. The spring must be centralized in the hanger before starting to thread the bolt into it.
48. Draw bolt tight and secure with nut.
49. Replace the spring U bolts and nuts and reconnect shock absorbers.

NOTE: It is essential that the threaded bushings fit tight in the spring eyes. Sidewise movement of the springs due to loose bushings or movement due to loose U bolts will cause car wander and erratic brake action.

STABILIZER BAR

Disassembly

50. Jack up front axle. Remove nuts (A) from front spring U bolts and remove plate (B) to which bottom of connecting link (C) is attached. (Figure 10).
51. Remove rubber bearing mounting clamp bolt nuts (D) and remove assembly.

Assembly

52. Reverse operations 50 and 51.

NOTE: The rear frame bolt hole is enlarged to permit alignment of the bar bracket. The bracket should be located so that the bar does not contact the frame side rail.

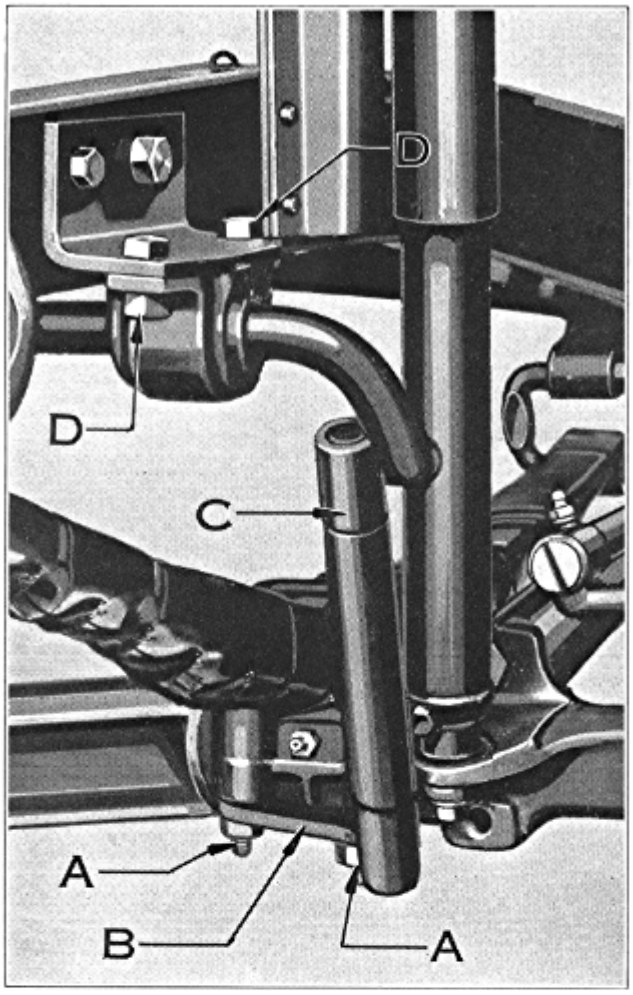

Figure 10

SECTION 3—STEERING GEAR

Removal of Horn Button and Steering Wheel

53. Disconnect horn wire at bottom of steering column.

54. Depress horn button (2) and turn to release. (See Figure 11.)

55. Remove horn button and tension spring (3).

56. Remove cup and tension spring assembly (4).

57. Remove rubber silencer (5).

58. Withdraw horn wire (6) from steering column together with fiber washer and steel washer on wire.

59. Remove steering column nut (9).

60. Remove contact spring (11).

61. Remove horn button retainer (10).

62. Remove steering wheel using J-739 steering wheel puller.

Removal of Steering Gear

63. Disconnect electric hand jack at bottom of jacket tube.

64. Remove two cap screws which attach column tube bracket to dash bracket.

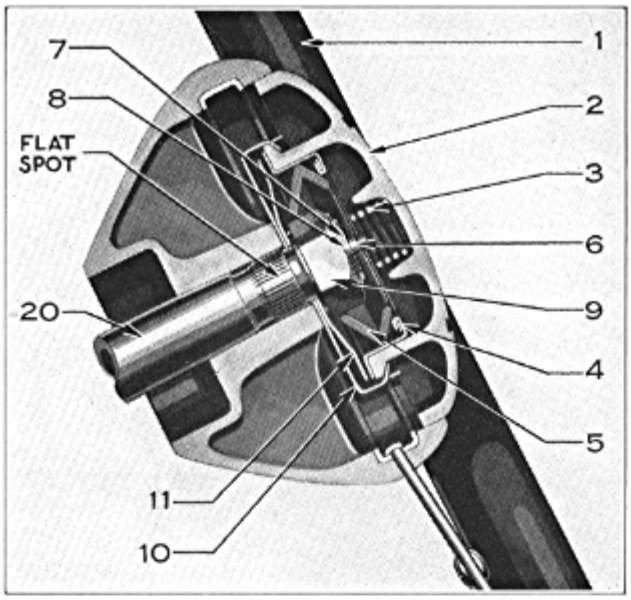

Figure 11

65. Loosen the steering column clamp at bottom. of jacket tube and remove jacket tube.

66. Remove the pitman arm nut and lockwasher

67. Remove pitman arm, using HM-871 pitman arm puller.

68. Remove floor mat and transmission opening cover.

69. Remove the three steering gear mounting stud nuts from outside of chassis frame side member and remove steering gear.

Disassembling Steering Gear

70. Remove 4 roller shaft cover screws, Figure 12.

71. Withdraw cover plate and roller shaft assembly.

72. Disengage roller shaft thrust plate from groove in roller shaft.

73. Remove 4 worm cover screws and remove cover and shims.

74. Push column tube out of bottom of housing which will remove the lower thrust bearing cup, bearing rollers, worm and upper thrust bearing rollers.

75. Pull upper bearing cup.

Reassembling of Steering Gear

Before reassembling the steering gear, all parts should be carefully inspected and worn or damaged parts replaced.

a. Worn roller shaft bearings—Replace housing assembly with factory rebuilt unit. These bearings are not replaceable except with special burnishing equipment.

b. Worn or scored roller shaft—Replace shaft and roller assembly.

c. Worn roller or worn roller needle bearing—Replace Roller Shaft Assembly.

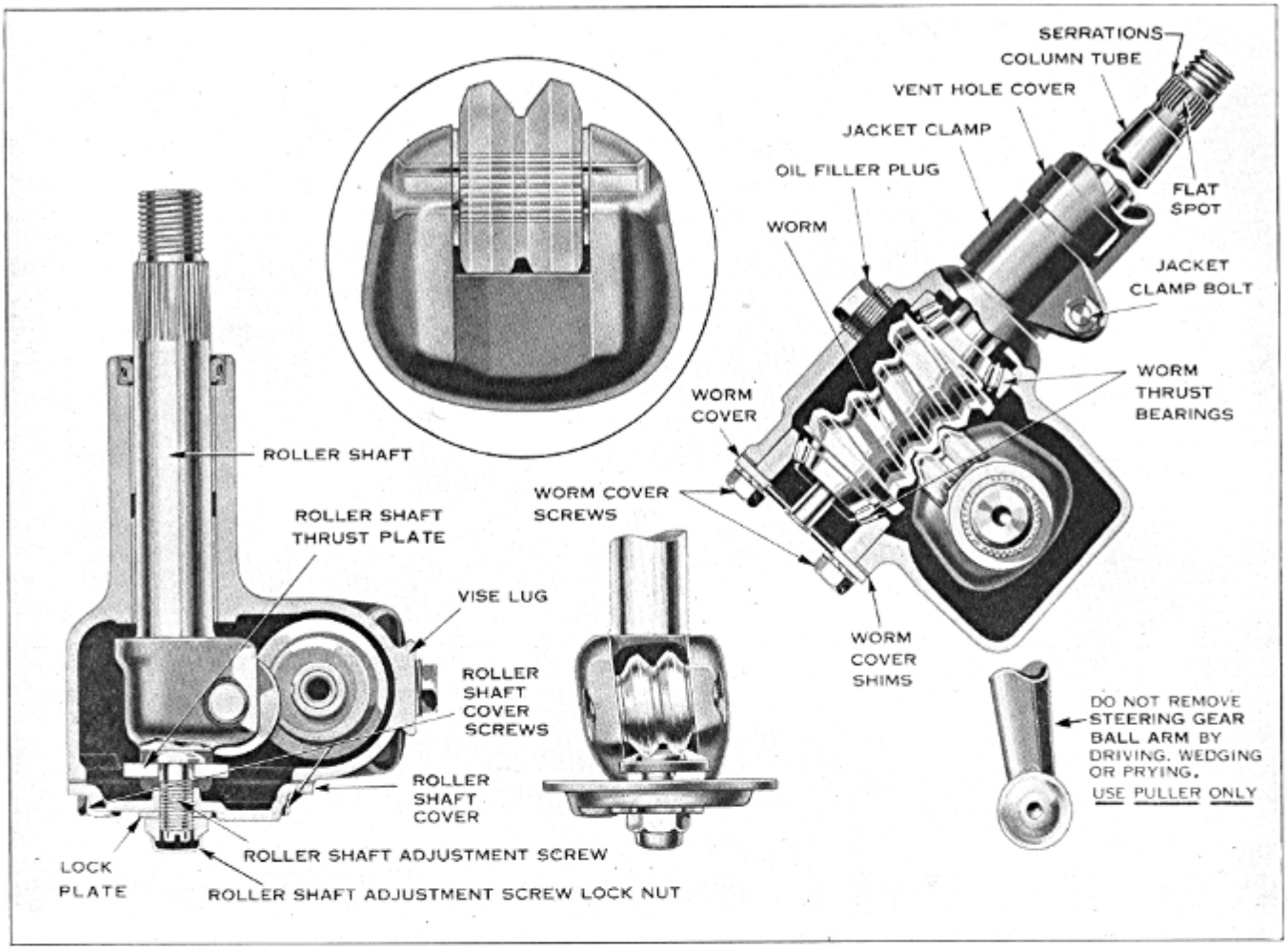

Figure 12

d. Worn worm—Replace Worm and Column Tube.

e. Bent column tube—Replace Column Tube.

All parts other than above specified can be replaced individually.

Before assembling, dip all wearing surfaces in steering gear lubricant.

76. Install upper worm thrust bearing cup in housing.

77. Place upper worm thrust bearing rollers on worm and install with worm and column tube assembly.

78. Install lower thrust bearing rollers and cup.

79. Replace shims, worm cover and 4 worm cover screws.

When the cover screws are drawn tight there should be no perceptible end play in the column tube while not more than ¾ pounds at the rim of the steering wheel (9″ radius) should be required to turn the column tube.

Adding shims under the cover increases clearance and reduces pull required to turn column.

80. Engage roller shaft thrust plate in groove in roller shaft and insert shaft cover and cover gasket as an assembly.

81. Install 4 cover plate lock screws.

82. Install pitman arm on roller shaft and steering wheel on column tube to check adjustment.

83. Turn steering wheel to exact mid-position of travel.

84. If pitman arm ball can be moved more than 1/32 of an inch without the steering column tube turning, the roller shaft lock screw nut and lock plate should be removed and the roller shaft adjusting screw turned in until the movement is reduced to 1/32″.

85. If more than 2 pounds pull is required at the rim of the steering wheel to move it from its *mid-position* the roller shaft adjutsing screw should be turned out.

86. After adjustment, replace the lock plate and lock nut and re-check the pitman ball arm movement and the pull required to turn the wheel from the *mid-position*.

87. Fill the housing through the filler plug with S.A.E. 160 E.P. lubricant for summer or S.A.E. 90 E.P. lubricant for winter and replace the filler plug.

Installation of Steering Gear

88. Insert steering column main tube through hole in toe board and roller shaft through hole in frame side member with three mounting studs passing through elongated holes in frame.

89. Install plain washers, lockwashers and nuts in frame bracket mounting bolts, turning up until the nuts just start compressing the lockwashers.

90. Install steering column jacket tube over steering column main tube and secure by tightening jacket clamp bolt at bottom of tube.

91. Secure column to dash bracket with bracket cap and two screws.

92. Turn steering gear until flat spot (See Figure 11) on column tube is straight down.

93. Install steering wheel with trade-marked spoke straight down.

94. Reverse operations 54 through 61.

95. Reconnect horn wire at bottom of steering gear.

96. Install pitman arm lockwasher and nut—*Tighten securely.*

97. Turn steering wheel from right to left several times to align column and tighten three steering gear frame bracket nuts on outside of frame side members.

98. Install transmission opening cover and floor mat.

99. Connect rear end of drag link to pitman arm.

100. Set steering gear on high point by turning steering wheel to middle of its travel with trade-marked spoke pointing down. Front wheels should be straight ahead.

NOTE: Unless steering wheel has just been installed and the position of the trade marked spoke in relation to the flat spot on the shaft is known, the horn button should be removed so that the flat spot can be seen.

101. If front wheels are not straight ahead remove part of shims (B), Figure 19, from front of drag link ball seat and place at rear of ball seat to turn wheels to left. Remove parts of shim (B) from rear of drag link ball seat and place at front of ball seat to turn wheels to right.

SECTION 4—FRONT END ALIGNMENT

NOTE: The front end alignment is checked with the Jiffy caster and camber gauge and turning angle plates available through the Hinckley-Myers Company of Jackson, Michigan. When these are used it is important that the car is level. A level section of the floor should be marked with zone line paint for the position of the front wheels while checking. Wooden blocks 1¼" thick should be placed under the rear wheels to compensate for the height of the turning angle plates.

102. Inflate all tires 16 x 6.00 and 16 x 6.25—front 24 pounds, rear 32 pounds. 15 x 7.00—front 22 pounds, rear 28 pounds.

103. Tighten all spring U bolt nuts.

104. Test shackle threaded bushings with pinch bar for looseness in spring eyes.

105. Disconnect bottom of shock absorbers and check control—the lower portion of the shock absorbers should move up and down under a steady pressure but should resist a sudden downward jerk. Remove and fill if necessary.

106. Jack up front axle.

107. Check spindle pins and bushings for wear and tie rod and drag link ends for looseness. See that torque arm end rubbers are in good condition.

108. Disconnect rear end of drag link from pitman arm. Wheels should turn free throughout their travel.

109. Lower front wheels in straight ahead position onto turning angle plates (Figure 13) and apply the brakes with a pedal jack. A pull or a push of 20 pounds on the rim of the tire should turn the wheels in either direction. If greater pull is required to turn the wheels, lubricate the front axle parts. If this does not reduce the pull required, remove the wheels and tie rod and check as in notes under paragraphs 21 and 23, Section 1.

110. Loosen the frame bracket bolts just enough to allow gear to shift in frame to line up at angle determined by height of setting at instrument board gear bracket and re-tighten frame bolts.

111. Loosen the instrument board gear bracket and allow it to shift to match gear column position and re-tighten. This will correct any possible misalignment of gear column.

112. Turn hand wheel to the mid-position of its complete travel or turning limits. (Drag link previously disconnected.) Hand wheel has a trade-mark or large depression on the underneath side of the spoke that should now point straight down. (See note under Paragraph 100.) Place this marked spoke in correct position and shake ball arm to determine amount of lost motion.

113. If pitman arm ball can be moved more than 1/32 of an inch without the steering column tube turning the roller shaft lock screw nut and lock plate should be removed and the roller shaft adjusting screw turned in until the movement is reduced to 1/32".

114. Turn hand wheel throughout full travel to test for free operation. If too tight, re-adjust as above more carefully.

NOTE: The worm is generated in such manner that close mesh with SECTOR teeth is provided at the mid-position or place corresponding to the straight ahead driving range with gradual relief toward the extremes. Since any normal wear is most pronounced at mid-position, this provision allows for subsequent adjustment without fear of binding toward the extremes.

115. A pull of 1½ to 2 pounds at the rim of the steering wheel should turn it in either direction from the "high point."

116. Reconnect drag link to pitman arm.

117. Set wheels in straight ahead position and adjust scales on turning angle plates to zero.

Figure 13

118. Remove outer and inner hub caps from front wheels.

119. Remove left hand spindle nut and washer and install jiffy caster and camber gauge as shown in Figure 13 so that level bubble is between gauge lines when pointer is set at zero.

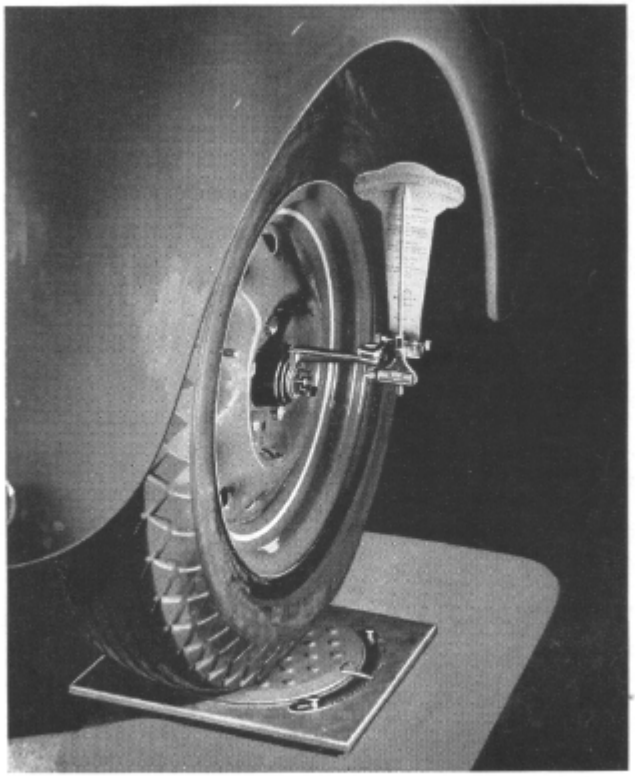

Figure 14

120. Turn the head of the jiffy gauge so that it is parallel to the axle as shown in Figure 14 with wheels still straight ahead and adjust the pointer with the thumbscrew until the level bubble is between the lines on the glass. The reading taken on the lower scale is the camber of the left wheel. A reading toward the wheel is positive and away from the wheel is negative camber; the correct camber is 1° to 1½° positive. If camber is insufficient or reversed, check spindle pin inclination as follows:

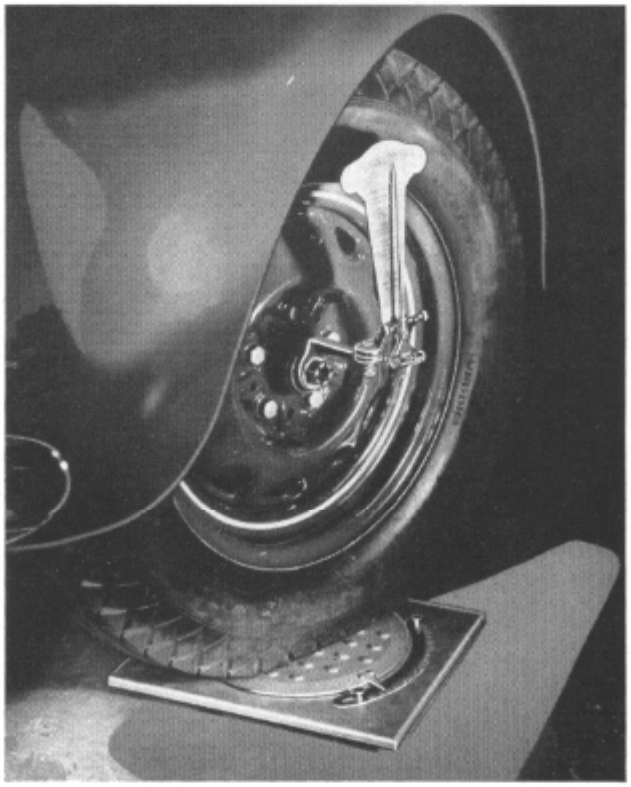

Figure 15

121. Turn the head of the jiffy gauge parallel to the wheel as shown in Figure 15 and turn wheels to left until pointer on left turning angle plate points to 25°.

122. Set pointer on zero and turn gauge on spindle until level.

123. Turn left wheel to right 25° and adjust level. The pointer reading on the top scale is the king pin inclination. This should be seven degrees.

NOTE: If the king pin inclination and the camber are off in approximately the same amount (for example, camber ½°, king pin inclination 6°), it is probably due to worn spindle pin bushings. If camber is off and king pin inclination is correct, the spindle is bent.

If spindle pin inclination and camber are both off an equal amount and there is no play in spindle pin, the axle center is bent. Camber should not be more than the specified 1½°; however, a decrease in caster, if spindle

pins are not loose in the bushings, is not detrimental to steering unless an actual reverse camber exists.

124. Turn the wheels back to the straight ahead position and reset the jiffy gauge as in paragraph 121, Figure 13.

125. Turn the wheels to the right until the pointer on the left turn plate is at 25°, level the gauge with the adjusting screw and take the reading of the pointer on the upper scale.

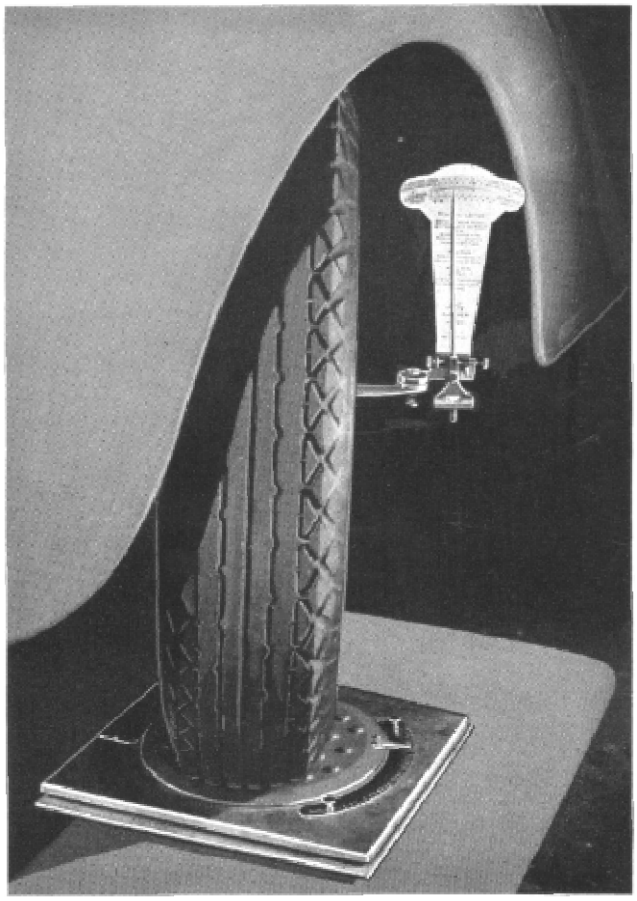

Figure 16

126. Turn the left wheel 25° to the left and level the gauge and take the reading on the upper scale (Figure 16). If both readings are on the same side of zero, subtract the one from the other to get the caster angle of the left wheel. If the two readings are on opposite sides of zero, add them to get the caster angle. Readings toward the wheel are positive and away from the wheel are negative caster angle.

127. Repeat operations 112 to 119 inclusive on the right wheel, turning the wheels so that the pointer of the right turn plate reads 25° to the right for the first caster reading and 25° to the left for the second caster reading.

128. If the caster is less than 1° or more than 2°, remove the bolts 1 and 2, Figure 17, attaching the torque arm to the axle, being careful not to loosen shims 3 and 4 between axle and torque arm.

129. To increase caster, decrease thickness of shim at (3) or increase thickness of shims at (4). To decrease caster, increase thickness of shim at (3) or decrease thickness at 4 (Figure 17). The shim thickness used on both sides of a car should always be the same.

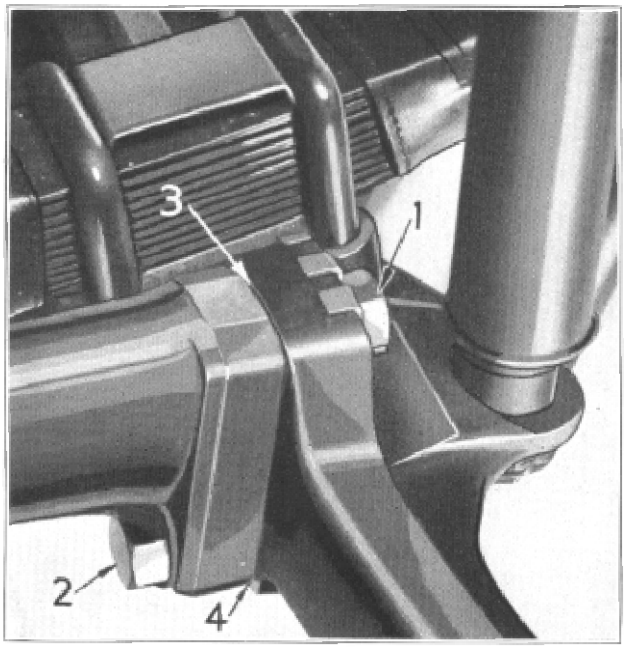

Figure 17

130. Install new shims and replace capscrews.

131. Repeat operation 125 to 128 inclusive to recheck caster.

132. Remove jiffy gauge and replace spindle washer and nut, adjust bearing and insert cotter key.

133. Turn left wheel to left 20°. Right wheel as indicated by pointer on turning angle plate should be 17° to 18° to left.

134. Turn right wheel to right 20°. Left wheel should now be 17° to 18° to the right.

If wheels do not turn to the corresponding angles, recheck tie rod ends for looseness and steering arms to see that they are drawn tightly into the spindles. If no looseness is found, the steering arms are bent and should be replaced.

135. Raise front end of car and remove turning angle plates and lower car. Release brake and roll rear wheels off blocks.

136. Pull car forward by bumper about 10 feet with wheels in straight ahead position to be sure all parts have assumed their normal road position.

137. Place toe-in gauge back of front wheels with rod (8, Figure 18) against inside felloe band of right wheel and end of sliding head (10) against outside edge of felloe band of left wheel. (See Figure 18.)

138. Be sure thumbscrew of both sliding head and rod are tight. Move sliding collar, to which scale 12 (Figure 18) is attached, out against standard bracket (11). Make a chalk mark on tire in line with sliding head.

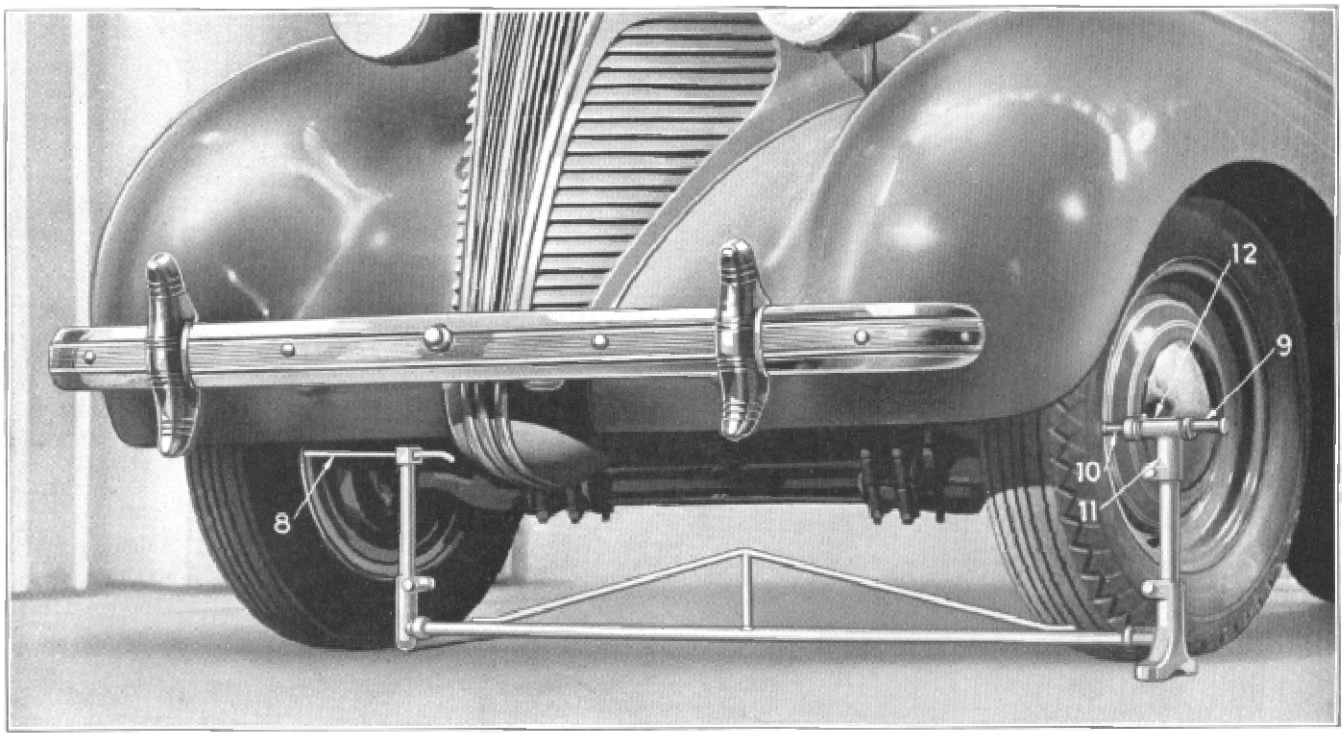

Figure 18

139. Remove toe-in gauge and pull car forward (not backward) with front bumper until chalk mark is at height of toe-in gauge standard at front of wheel.

140. Put toe-in gauge in place as in Figure 18 with rod (8) against inside edge of right felloe and sliding head (10) in line with outside edge of left felloe at chalk mark on tire. (See Figure 18).

141. Loosen sliding head lockscrew and push head against edge of felloe. Tighten lockscrew.

142. The scale reading at the inner edge of the standard bracket is the toe-in in inches. This should be zero to 1/8", preferably 1/8".

143. To adjust the toe-in, loosen the clamp bolt nuts on the tie rod ends and turn the tie rod with a Stillson wrench. Pulling the wrench handle forward at the bottom decreases toe-in.

144. After getting correct toe-in, tighten tie rod end clamp bolt nuts.

145. Set wheels straight ahead and check steering wheel to see that trade-marked spoke is pointing straight down. (See Note under Paragraph 100.)

146. If front wheels are not straight ahead remove part of shims (B) from front of drag link ball seat and place at rear of ball seat to turn wheels to left. Remove parts of shims (B) from rear of drag link ball seat and place at front of ball seat to turn wheels to right. (See Figure 19.)

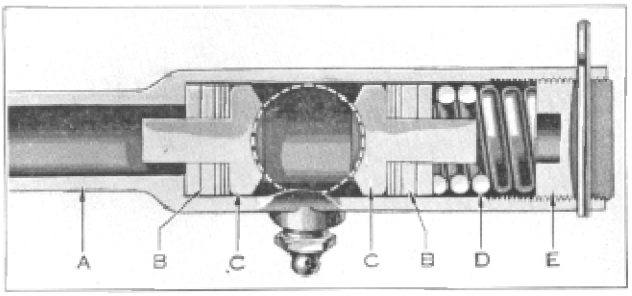

Figure 19

NOTE: *Whenever the thickness of shims between the torque arms and brackets are changed to increase or decrease caster it is necessary to put the steering gear back on the high point.*

147. Reconnect the drag link to the pitman arm and lubricate thoroughly.

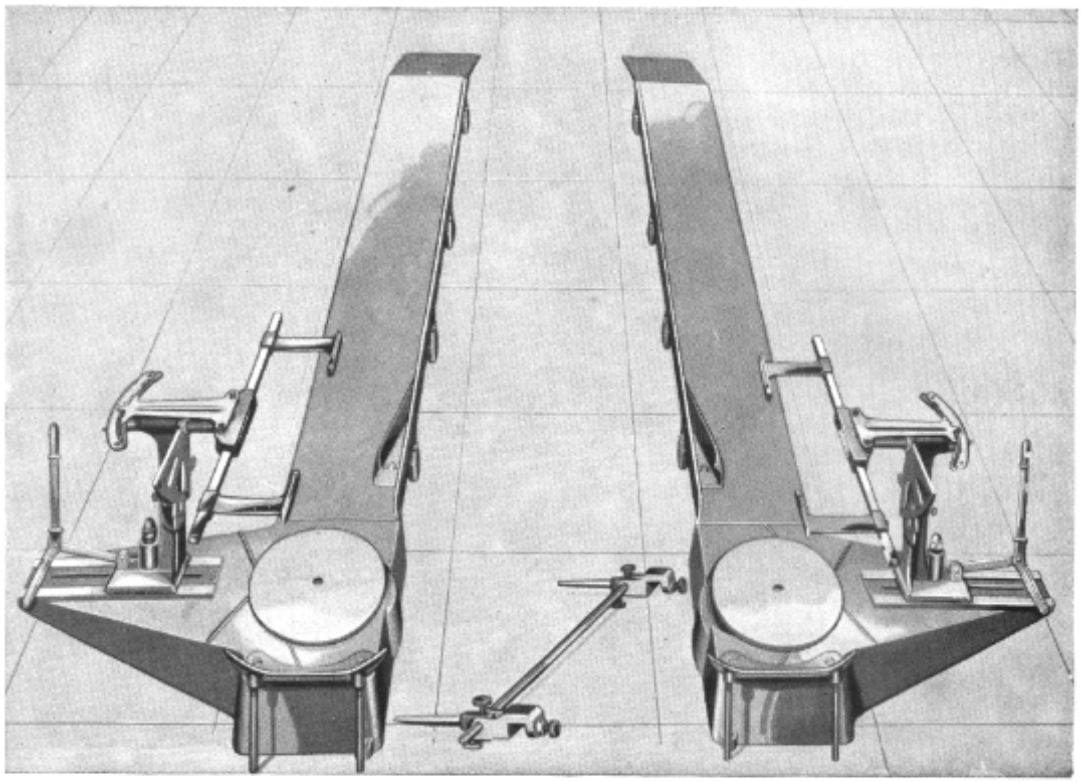

HMO-20—$285.00

Runway Type Wheel Aligner

This all-in-one runway type of aligner is designed particularly for the larger shop with a sufficient potential of wheel aligning business to justify the purchase of this type of equipment. It is speedy in operation, accurate in its readings and checks with the weight of car either on or off the wheels.

Checks Scientifically—Caster, Camber, King Pin Inclination, Toe-In, Turning Radius. All readings are direct.

Requires very little floor space. Easily installed because of adjustable leveling legs on runways and leveling screws on checking units.

Complete operating instructions furnished with equipment.

Front Axle, Steering Gear, and Alignment Tools and Equipment

J-885	Torque Arm Bolt Press	$ 2.90
J-990-1-2	Spindle Bushing Remover and Replacer Set (1937)	3.50
J-479-1-2	Spindle Pin Remover Set	1.40
J-992	Tie Rod Stud Remover	3.25
J-739	Steering Wheel Puller	5.50
HM-871	Pitman Arm Puller	3.85
J-751	Turning Angle Indicators (Set of Two)	25.00
J-800	Jiffy Caster and Camber Gauge	15.00
J-710-H	Toe-in Gauge	12.50
HMO-20	Runway Type Wheel Aligner	285.00
HMO-72	Wheel Balancer	39.75
HMO-8	Wheel Balancing Weights (Box of 50)	8.75
J-134	Brake Pedal Depressor	3.75

Place orders for tools and equipment with the Hinckley-Myers Co., Jackson, Mich.

CARBURETOR

1937 Hudsons and Terraplanes

WDO—Duplex Type
W-I—Single Type

Carburetor Servicing is an important part of every engine tune-up. To properly service a carburetor, the purpose of each part must be known and adjustments must be complete and carefully made. Inaccurate adjustments will not give satisfactory car performance or gasoline mileage. *Make complete adjustments accurately.*

The carburetor is simply a mixing chamber for gasoline and air. There are, of course, provisions for controlling the quality or richness of the mixture so that it will be correct for all conditions of operation.

The carburetor used on the 1937 Terraplane models 70 and 71 are of the single type while a Duplex Carburetor is used on Terraplane model 72 and all Hudson sixes and eights.

These carburetors are identical in their functioning, the difference being in the fact that the Duplex has two throats instead of one and consequently requires two low speed and two high speed fuel systems.

Both carburetors incorporate the following features:

(1) Down Draft Type
(2) Triple Venturi
(3) Climatic Control (Duplex type only)
(4) Automatic Slow and Fast Idle
(5) Anti-Percolating Unit
(6) Positive Action Accelerating Pump
(7) Slow Throttle Retard

CARBURETOR OPERATION

Since the functioning of the two types of carburetors is the same, the following explanation applies to both. Where actual service operations differ, due to mechanical differences in the two types, this will be given consideration in the detailed operations.

Figure 1 shows the passages for both the gasoline and air for normal operation from idle speed to maximum speed. The gasoline enters at the top of the float chamber through the float needle valve. The float controls this valve, allowing only enough gasoline to enter to maintain the gasoline to the correct level.

The gasoline passes from the float chamber through the main fuel supply jet, through the passages in the carburetor body to the main nozzle and also into the idle jet.

The mouth of the main nozzle and idle jet passages are slightly higher than the normal level of fuel in the float chamber so that fuel will stand near the end of the nozzle and idle passage but will not run out.

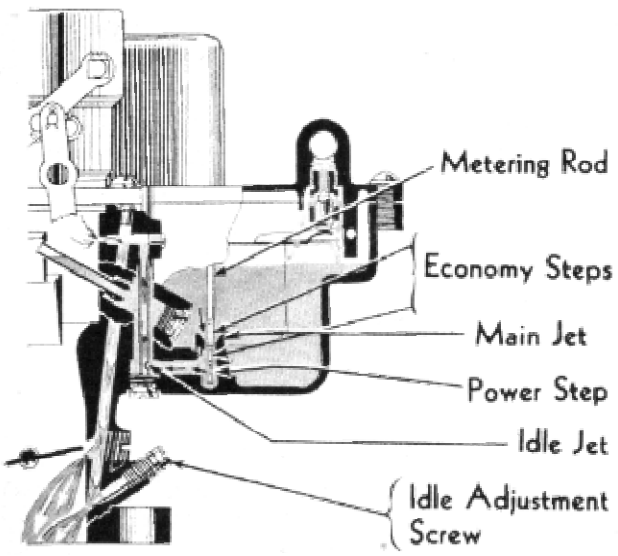

Figure 1

Low Speed Operation

When the engine is cranked with the throttle in the position shown in Figure 1 (idle setting) a vacuum is created below the throttle. This causes air under atmosphere pressure to push past the edge of the throttle, however, the volume that can pass is so small that it will not cause high enough velocity past the main nozzle to pick up any fuel.

The vacuum below the throttle valve, however, also causes air to flow into the idle inlet port through the small passage to the right of the carburetor throat, picking up gasoline from the idling jet and delivering it into the carburetor throat through the upper idle outlet port just below the throttle and the lower outlet port in which the idle adjustment screw is located. This is a rich mixture of fuel which mixes with the air passing the throttle to give a correct mixture for idling and low speed operation.

The quality of the mixture is determined by the setting of the idle adjusting screw, while the quantity is determined by the amount of the upper outlet port exposed below the throttle valve.

As the throttle is opened, more of the upper idle port is exposed allowing more mixture to enter the

carburetor and also increasing the amount of air passing the throttle. This increases the engine speed.

As the amount of air passing the throttle increases, the velocity of the air past the main nozzle is increased so that fuel is drawn out of the nozzle into the air stream.

The opening of the throttle reduces the manifold vacuum so that the difference in pressure between the idle inlet port and outlet ports is decreased and the flow of air through the idle by-pass is decreased. At speeds above 20 m.p.h. the fuel supplied through the idle by-pass decreases and ceases entirely at about 30 m.p.h. *The idle adjustment, therefore, has little effect on performance or gasoline consumption at speeds above 20 m.p.h. and no effect above 30 m.p.h.*

Servicing the Low Speed System

The idle jet is screwed into the carburetor body from the bottom. The upper end of the jet is machined to a straight cylindrical shape, however, as the jet is screwed into place, the upper end is forced into a taper seat in the housing which forms a taper end on the jet to give a tight seat.

The jet can be removed and replaced once and a good seal obtained. If the jet is removed a second time or installed without a gasket under the head, the taper formed on the upper end will have been forced back too far to make a proper seal and a new idle jet and gasket must be used.

The small hole in the side of the jet meters the flow of gasoline to the idle ports. This should be cleaned with compressed air. Cleaning with a wire or drill will ream the hole so that an over-rich mixture, rough idle and poor economy will result.

The port holes near the top of the carburetor, which supply air to the idle by-pass, accurately meter the air. If these become clogged by carbon formation, a rich mixture will result. These holes, which are drilled in cast iron, can be cleaned with a soft wire.

The throttle shaft should be checked for wear and the throttle valve tested for a full seat when closed. All carbon should be scraped out of the carburetor throat around the throttle valve and the idle outlet ports cleaned. The condition of the throttle shaft, throttle valve, carburetor throat and port holes are all important in obtaining the correct mixture of air and gasoline for idle and low speed operation.

Choke Operation

As previously stated, there is not sufficient air flowing past the main discharge nozzle at cranking speeds to cause flow of gasoline. However, the idle by-pass cannot supply sufficient gasoline for starting a cold engine so that additional means must be provided for obtaining a correct starting mixture. The choke valve performs this function.

When the choke valve which is located above the main nozzle is closed, restricting flow of air into the carburetor, a vacuum is created between the throttle valve and the choke valve. This gives the necessary low pressure at the tip of the main discharge nozzle to cause flow and supply gasoline for starting.

It is important that the choke valve closes tightly and opens fully. A partially closed throttle, or a partially clogged air cleaner will cause excessive fuel flow from the main discharge nozzle at all speeds and result in poor performance and poor economy.

High Speed Operation

The fuel from the main nozzle is atomized in the primary venturi, Figure 2, and kept centrally located in the air stream by the surrounding blanket of air passing into the secondary venturi and again into the main venturi—offering a triple protection against

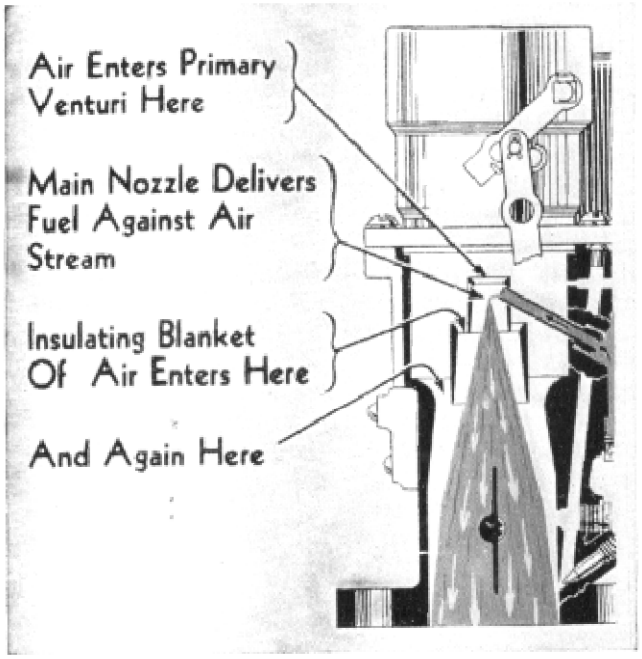

Figure 2

liquid fuel coming into contact with the walls of the carburetor where it is hard to atomize. This insures against liquid fuel being drawn into the manifold.

In Figure 1, it will be noted that with the throttle in the idling position, the metering rod is at its lowest position, while with the throttle wide open as in Figure 2 the metering pin has been raised to its highest position. In the lowest position the largest section of the rod is in the main jet so that fuel flow is restricted to give an economical mixture for normal running. As the metering rod is raised by opening the throttle, the smaller section of the rod comes into the jet for proper fuel delivery for average open road driving speeds, while with wide open throttle the smallest section of the rod is in the main jet giving a mixture for maximum power for acceleration, hill climbing and maximum speed.

The position of the metering rod in respect to throttle opening is very important. If the change

from one step to the other is not at the correct throttle opening it will cause poor gasoline mileage, poor performance, and flat spots in acceleration.

To maintain the metering rod in proper relation to the throttle valve opening it is important to see that the connecting linkage is not worn or bent and the adjustment, which will be covered later, made accurately.

The metering rod and main jet must both be checked for wear and the metering rod must be straight.

The flow from the main discharge nozzle although controlled by the main jet and metering rod is also affected by the height of the tip of the main discharge nozzle above the gasoline level in the float bowl and the position of the tip of the nozzle in the air stream.

The float level must be checked accurately. The nozzle must be put into position tightly against *one gasket*. If more than one gasket is used, the nozzle will be low, increasing the flow. The use of more than one gasket will also pull the nozzle away from the center of the air stream affecting the flow. If a poor gasket is used gasoline will leak into the carburetor throat around the nozzle giving a rich mixture and poor economy.

The Accelerating Pump

When the throttle is opened quickly, the air, which is relatively light, rushes in, while the gasoline which is heavy, is slow in increasing its rate of flow. This would cause a momentary lean mixture in the carburetor and sluggish operation when an attempt is made to accelerate quickly unless an auxiliary means of supplying additional fuel is provided. The Accelerating Pump is provided to supply the necessary additional gasoline until the flow through the main discharge nozzle has increased to take care of the new throttle position. Figure 3 shows a section through the Accelerating Pump and passages.

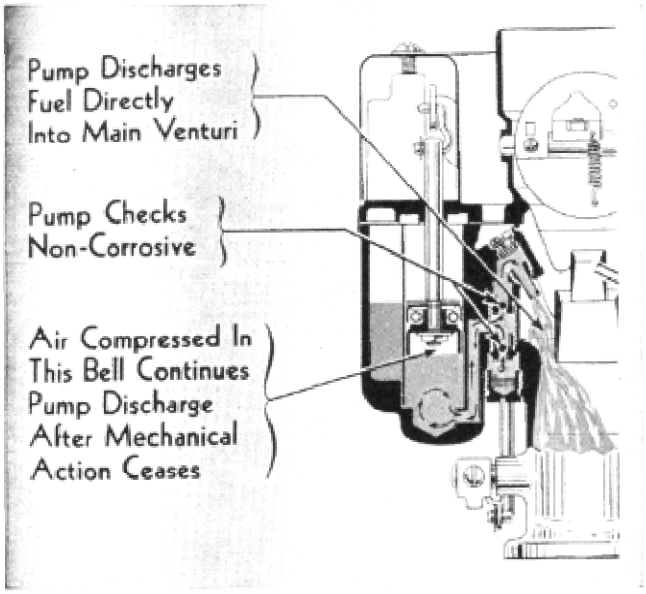

Figure 3

As the throttle is closed the plunger moves upward drawing gasoline out of the float chamber through the screen, through the inlet ball check valve and into the pump cylinder, the air pocket always remaining between the fuel and the plunger.

The slightest opening of the throttle moves the plunger down, compressing the air and causes an immediate discharge of fuel past the outlet ball check valve and through the jet which points downward

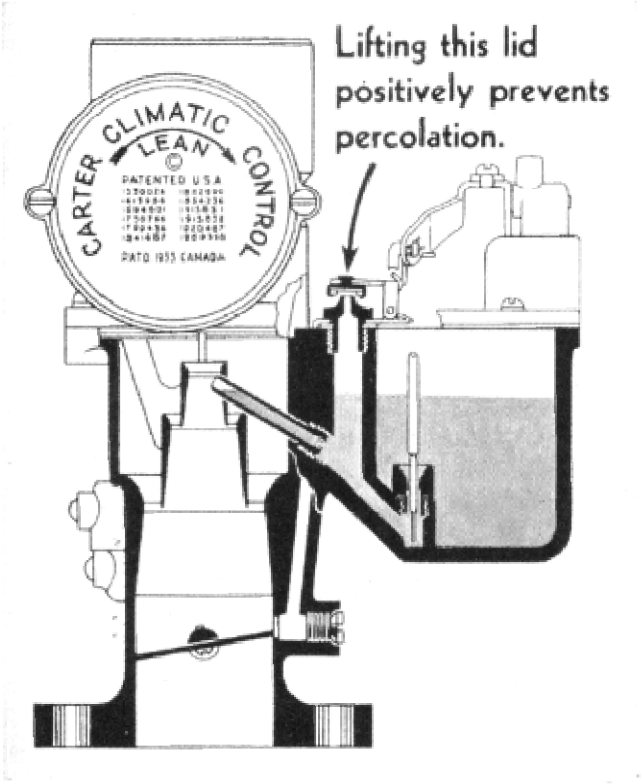

Figure 4

into the main venturi. When the throttle is fully opened, the discharge is continued for a number of seconds by the air compressed between the plunger and the fuel.

The plug shown in the top of the Accelerating Pump passage (Figure 3) on the single type carburetor has a disc type check valve. When the accelerating pump is not supplying fuel, the disc valve opens a vent into the top of the float bowl to prevent gasoline being sucked out of the accelerating pump nozzle. This valve should be checked to see that it opens and closes. If this valve sticks it will cause excessive gasoline consumption.

The Duplex carburetor has no valve but uses a vent near the bottom of the accelerating pump nozzle communicating with a hole drilled through the carburetor body.

The accelerating pump nozzle should be blown

clean. Do not use a wire or drill as the duration of the delivery of gasoline from the pump will be reduced if the nozzle opening is enlarged.

The ball check valves should be tested by alternately blowing and sucking them. They must be open in one direction and completely sealed in the other.

When installing the screen in the bottom of the accelerating pump passage, place it in the plug and then screw the plug in place. Never put the screen in the passage before screwing the plug in place as it will probably be collapsed by the plug.

When reinstalling the pump plunger, always use the loading sleeve furnished with the tune-up kit to prevent damage to the leather seal.

Anti-Percolating Unit

While a car is being driven, the carburetor is kept cool by the large volume of air passing through it and the heat absorbed in the atomization of the fuel.

When the car and engine is stopped the cooling system is not able to carry off the heat stored up in the engine parts and it is radiated into the air under the hood. The carburetor absorbs much of this heat so that in hot weather or after hard driving the fuel in the passages may boil. The vapor bubbles will rise and those being trapped in the passage to the main nozzle will push gasoline ahead of them and out of the nozzle into the venturi. As the bubbles continue to form the gasoline is forced out and collects in the manifold. This flooded manifold condition makes restarting of the engine difficult.

To prevent this action, which is known as percolation, an anti-percolating valve, Figure 4, is incorporated in the carburetor.

The valve opens and closes a vent which connects directly at the bottom of the main nozzle and carries off any vapor bubbles which may form so that gasoline is not forced out of the nozzle.

The valve is opened by the throttle linkage when the throttle closes to the idling position and closes with the slightest opening of the throttle.

Slow Closing Throttle

When driving at high speeds with open throttle there is a rapid flow of gasoline through the carburetor. If the throttle is suddenly closed, cutting off the flow of air to the engine, the gasoline will continue flowing due to its inertia and result in a momentary rich mixture which may cause the engine to run unevenly or even stall.

By preventing the throttle from closing rapidly when pressure is released from the accelerator pedal, this gasoline is used without causing uneven running of the engine.

Slow closing of the throttle is accomplished by the use of a plunger operating in a cylinder in the carburetor float chamber (see Figure 5). As the throttle is opened the plunger moves upward and gasoline passes the check ball valve in the stem of the plunger and also through the small hole in the stem just below the check valve, filling the cylinder below the plunger full of gasoline. When the pressure is relieved from the accelerator pedal, the throttle spring attempts to close the throttle. The check ball goes to its seat and the speed of closing of the throttle is retarded as the gasoline below the plunger can escape only through the small hole in the plunger stem.

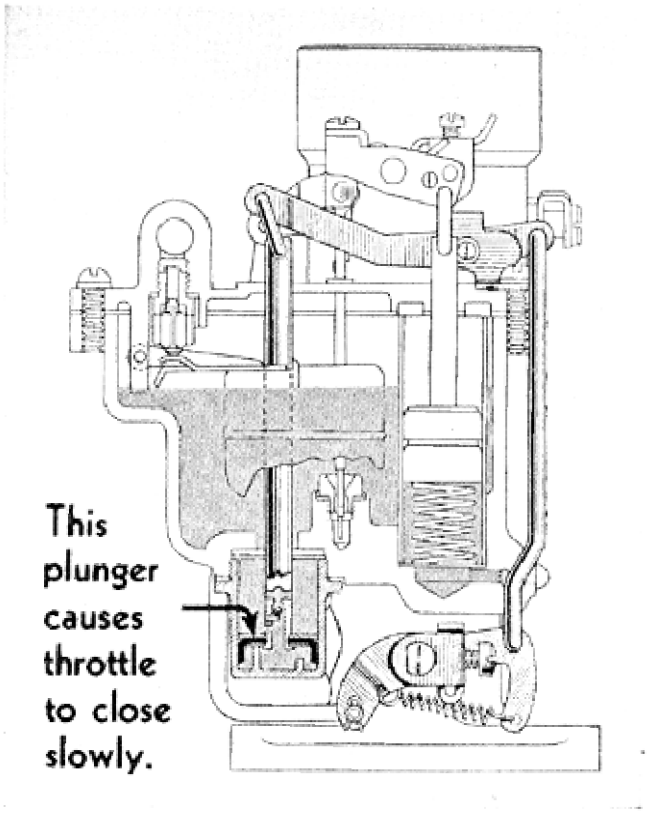

Figure 5

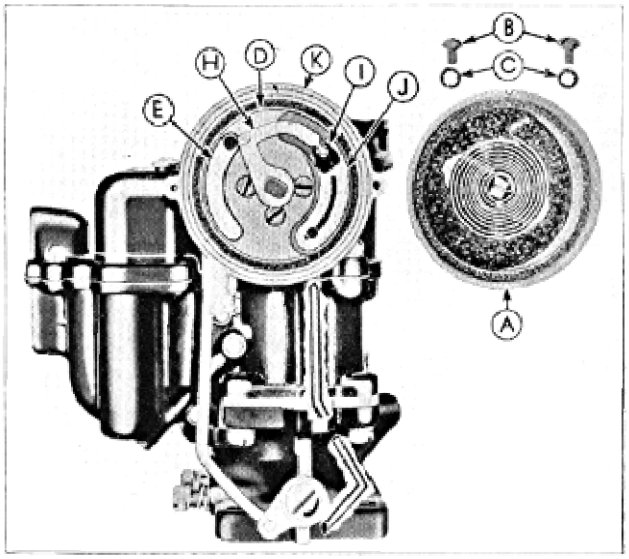

Figure 6

Climatic Control (Duplex)

The climatic control is an integral part of the carburetor and consists primarily of two major assemblies: the thermostatic coil spring and the piston plate housing assembly. The thermostatic coil spring assembly (A) consists of cover, insulators and spring (Figure 6).

The housing assembly consists of the piston plate housing (K), choke shaft, and lever (H), screen (E) and piston (I).

The operation of the climatic control depends on intake manifold vacuum and exhaust manifold heat.

On initial starting, as the engine fires, the vacuum created in the intake manifold tends to pull the piston down, exerting tension on the thermostatic spring and opening the choke valve far enough for initial running. Hot air is drawn through the stove on the exhaust manifold, through the connecting pipe and entering the housing through the screen, and passing around the piston to the intake manifold. As the heat increases around the thermostatic spring, the spring loses its tension allowing the choke to open gradually.

After it reaches full open position it will remain open by its own weight. When the engine is stopped the thermostatic spring cools off causing the choke to close.

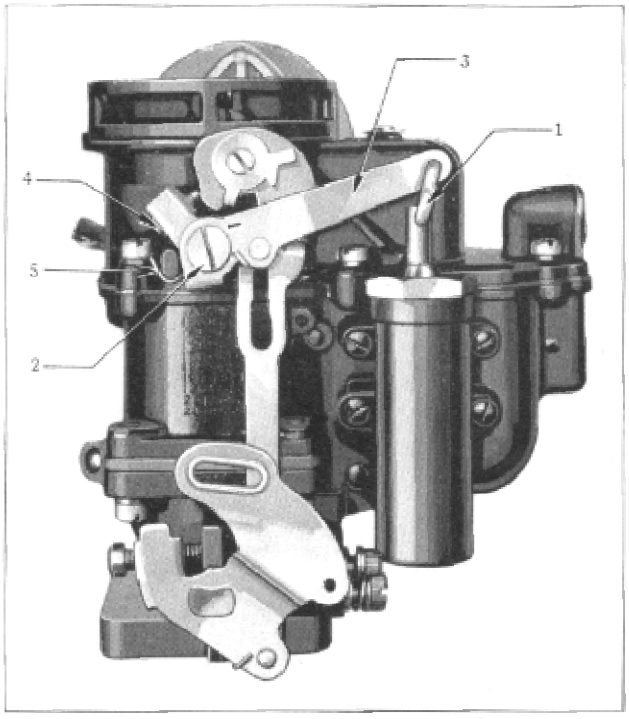

Figure 7

Slow and Fast Idle (Duplex)

When the choke valve is closed by the thermostatic spring, a cam plate on the choke shaft rotates so that the high point is in line with the high idle screw holding the throttle valve open to give the correct opening for starting and an idle speed of approximately 15 m.p.h. during the warm-up period. As the engine warms up and the choke valve is opened, the cam is rotated so that the throttle closes to the normal idle position.

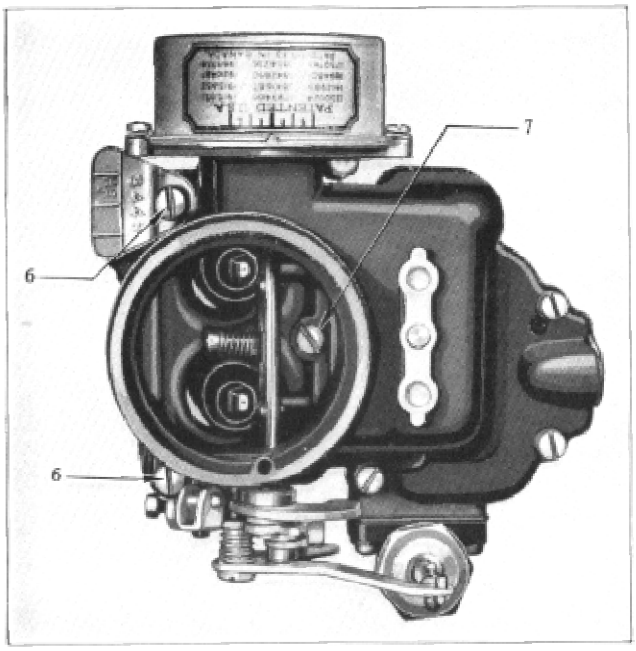

Figure 8

DUPLEX CARBURETOR SERVICE

To Disassemble

Remove carburetor from motor. Use Tune-up Kit J-819-B.

(1) Remove pin spring and dash pot connector link (1), Figure 7.

(2) Remove dash pot arm attaching screw (2) and dash pot arm (3), pin and high idle screw (4) assembly and dash pot arm spring (5).

(3) Remove two air horn attaching screws (6) and lock washers on outside and one blank disc check plug or relief check assembly (7) under choker valve on inside of air horn. (Figure 8.) Remove air horn and climatic control assembly. (See Climatic Control Service Instructions to service this unit.)

(4) Remove pin spring on metering rod arm pin (8), slide out pin and lift out metering rods (9) and metering rod spring (10). (Figure 9.)

(5) Remove pin spring and pump connector link (11). (Figure 9.)

(6) Remove spring retainer and connector rod spring to remove throttle connector rod (12). (Figure 9.)

(7) Loosen clamp screw (13) on metering rod arm (14). Remove pump arm (15) and countershaft assembly. Metering rod arm (14) and anti-percolator arm (16) and screw assembly will be free for removal. (Figure 9.)

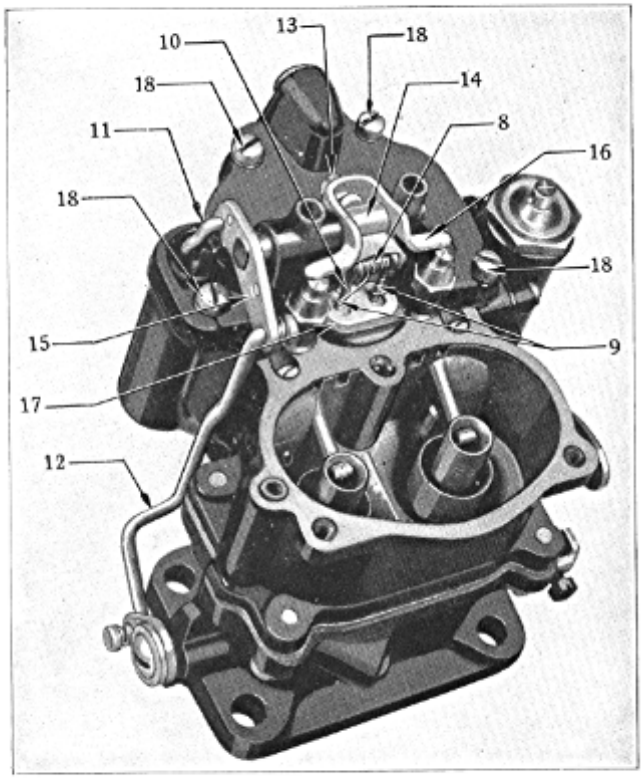

Figure 9

(8) Remove metering rod disc retainer (17) and screw and two metering rod discs from bowl cover. (Figure 9.)

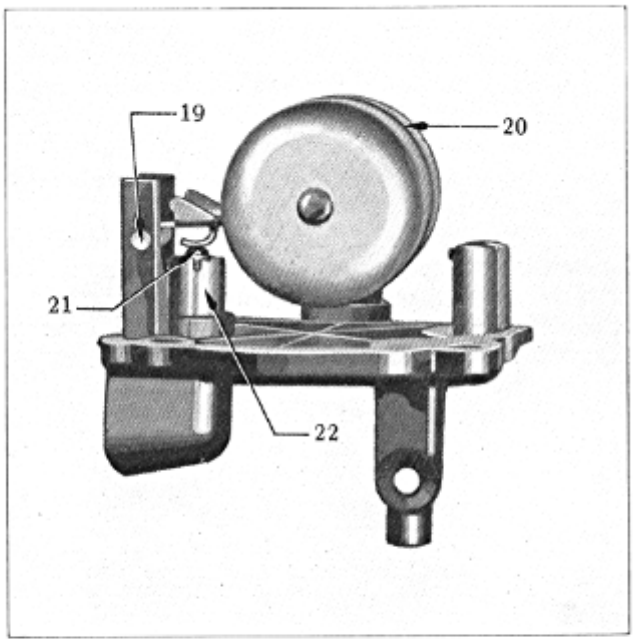

Figure 10

(9) Remove four bowl cover attaching screws (18) and lock washers to remove bowl cover and body gasket. (Figure 9.)

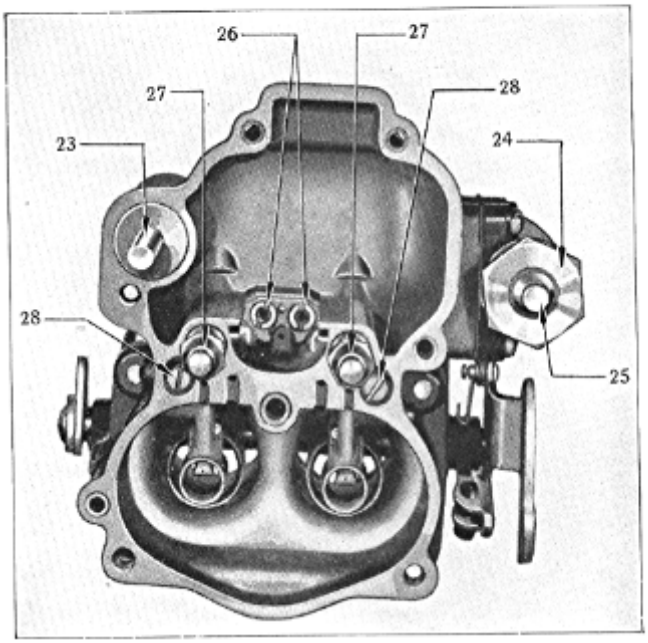

Figure 11

(10) Remove float lever pin (19) and float and lever assembly (20). (Figure 10.)

(11) Remove needle (21) and needle seat assembly (22). (Figure 10.)

(12) Remove plunger and rod assembly (23) and pump spring (under plunger). Remove plunger shaft hex nut (24) to disassemble plunger (25). (Figure 11.)

(13) Remove both metering rod jets (26) and gasket assemblies. (Figure 11.)

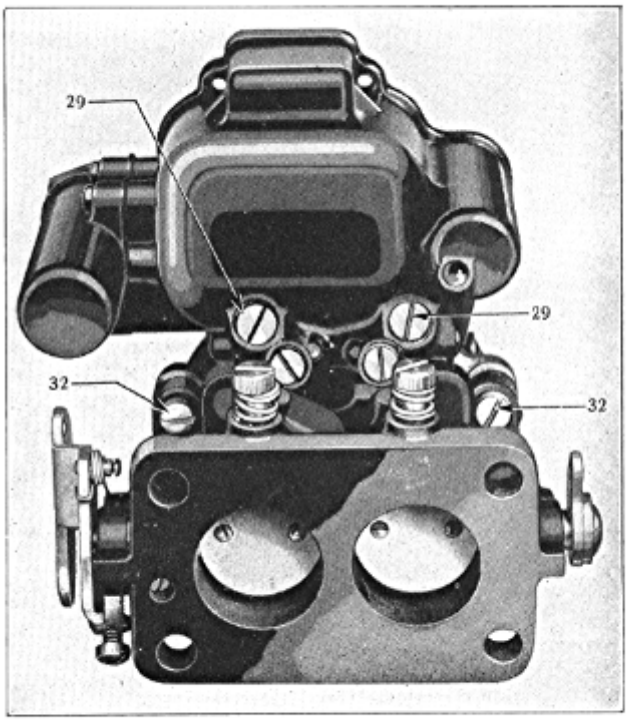

Figure 12

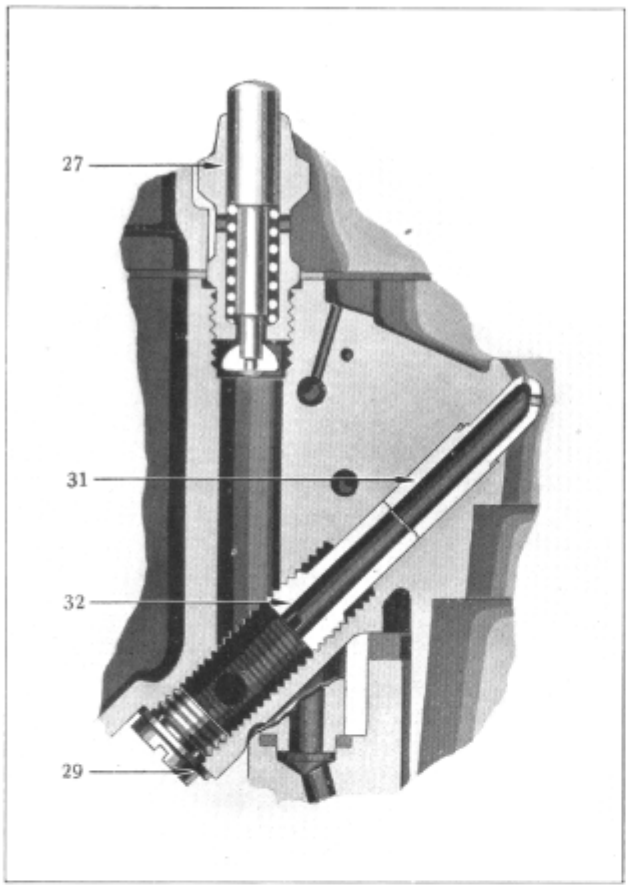

Figure 13

(14) Remove both anti-percolator valve plug assemblies (27) using 13/32 inch wrench. (Figure 11.)

(15) Remove both pump jet passage plugs (28) (Figures 11 and 15).

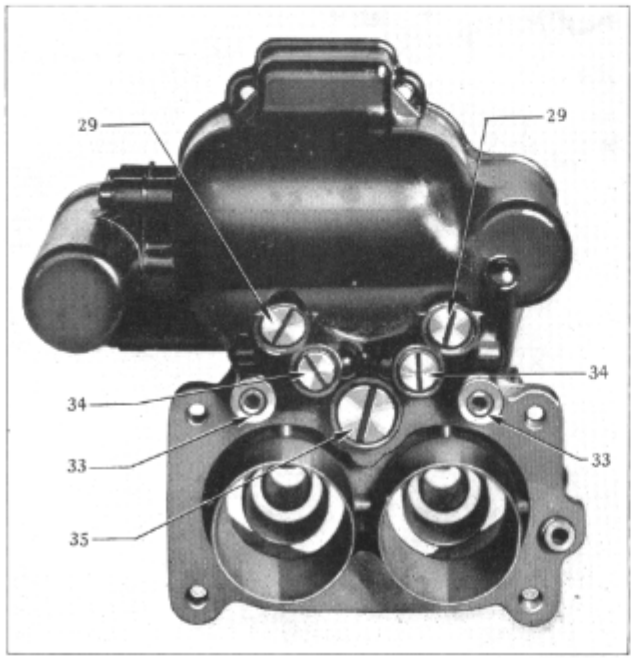

Figure 14

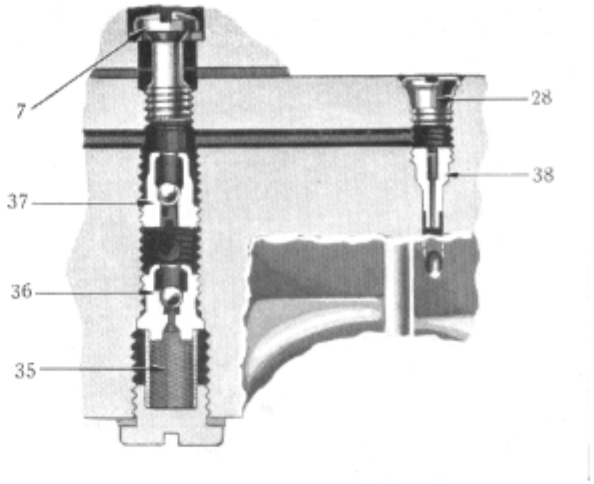

Figure 15

(16) Remove both pump jets (38) (Figure 15).

(17) Remove both main nozzle plugs (29) and gasket assemblies (Figures 12 and 13).

(18) Remove both nozzle retainer plugs (32) and nozzles (31) (Figure 13). Nozzles are just pressed in and are held by retainer plugs; use nozzle puller included in J-819-B Kit.

(19) Remove the four flange attaching screws (32) (two shown) and lock washers to remove body flange assembly (Figure 12).

(20) Remove body flange gasket and both idle passage gaskets (33) (Figure 14).

(21) Remove both low speed jets (34) and gasket assemblies (Figure 14).

(22) Remove check valve passage plug gasket and strainer assembly (35) (Figures 14 and 15).

(23) Remove intake ball check plug assembly (36) and discharge ball check assembly (37) (Figure 15).

Body Flange Assembly

(24) Remove the four throttle valve attaching screws (39) and both throttle valves (40) (Figure 16).

(25) Remove throttle centering screw (41),

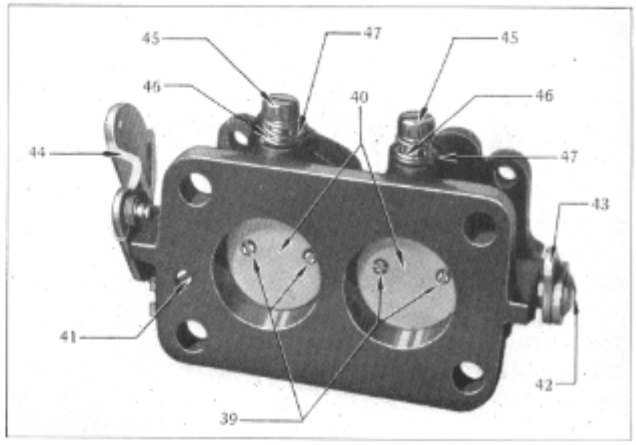

Figure 16

throttle shaft arm attaching screw (42), throttle shaft washer and throttle shaft arm (43) (Figure 16).

(26) Now remove throttle shaft and lever assembly (44) (Figure 16).

(27) Remove idle adjustment screws (45) and springs (46) (Figure 16).

(28) Remove both idle port plugs (47) (Figure 16).

To Reassemble

(29) Before reassembling carburetor, clean all parts with clean gasoline, using a small brush and a clean pan. Do not immerse cork parts in gasoline. Then blow through all passages in casting with compressed air. Blow off each part before installing it in carburetor. Use all new gaskets. Check all parts to carburetor specifications. Replace all worn parts with new. If any carbon is in the bores of the carburetor, remove it before installing parts. Install all parts tight.

(30) Clean and paint casting as instructed on label on can of Carter Special Body Finish.

(31) Reassemble dash pot piston (25) (Figure 11) in cylinder using loading sleeve (included in tune-up kit J-819-B) to avoid damage to plunger leather.

(32) Install dash pot plunger hex nut (24) and gasket (Figure 11).

(33) With carburetor body flange facing up, install throttle shaft and lever assembly (44) (Figure 16). Then back out throttle lever adjusting screw (48) (Figure 19). If throttle shaft is worn, damaged or lever is loose on shaft, replace it.

(34) Install throttle centering screw (41) (Figure 16). If it shows wear, replace.

(35) Install throttle valves (40) using new valve screws (39) (Figure 16). The trade mark "C" on the throttle valve should be facing up and to the idle port side. With the valve screws loose, tap throttle valves lightly to centralize them in the bore of carburetor. Hold valves in place with fingers, and securely tighten screws. Be sure throttle lever adjusting screw is backed off, so valves can seat. If valves are worn or damaged, replace.

(36) Install throttle shaft arm (43), throttle shaft washer and throttle shaft arm attaching screw (42) (Figure 16).

(37) Install fast idle connector link (49) and spring (50) and pin spring to throttle shaft and lever assembly (Figure 21).

(38) Install idle passage plugs (47). Install idle adjusting screws (45) and springs (46) (Figure 16). If idle adjusting screws are burred, replace. Adjust idle screws ¼ to ¾ turns open from seat.

(39) Install new low speed jet (34) and gasket assemblies (Figure 14). Be sure metering holes in low speed jets are open. Install tightly, so low speed jets seat at both ends. (See Page 2—"Servicing the Low Speed System.")

(40) Install discharge ball check assembly (37) first and then intake ball check assembly (36) (Figure 15). Be sure checks seal. They can be tested by blowing the ball against the seat and should work freely. If they leak or stick, replace them. Install tight so they seat in casting. Install strainer in plug assembly (35), (Figure 15), and plug (35) in casting (Figure 14). If strainer is clogged or damaged, replace it.

(41) Install new body flange gaskets and new idle passage gaskets (33) on main body casting (Figure 14).

(42) Install body flange assembly on main body casting, attaching with four flange attaching screws (32) and lock washers (Figure 12).

(43) Install both main nozzles (31) using new nozzle gaskets (Figure 13); screw nozzle on puller (included in Tune-up Kit) with small hole in nozzle facing up to insert. (Be sure old nozzle gaskets have been removed from casting.) Then install nozzle retainer plugs (32). Then install nozzle plug (29) and gasket assemblies. If nozzles are damaged, replace. (Be sure only one gasket is used on each nozzle.)

(44) Install both metering rod jets (26) and gasket assemblies (Figure 11). If metering rod shows wear, replace metering rod jets and metering rods. Always replace both metering rods and jets; never use new rod with old jet or vice versa.

(45) Install pump spring and then plunger and rod assembly (23) using loading sleeve (included in Tune-up Kit). If leather is cracked or worn, replace. Be sure plunger nut is tight, so pump leather does not leak on plunger assembly. Put a little castor oil around leather to keep it from becoming dry and leather will seal in pump cylinder.

(46) Install both pump jets (38). Be sure holes in jets are open. If jets are clogged or damaged, replace, then install pump jet passage plugs (28) (Figure 11).

(47) Install both anti-percolator valve plug assemblies (27) (Figures 11 and 13), using 13/32" wrench. If they show wear or damage, replace.

(48) Examine bowl cover. If it shows wear or is bent or warped, replace.

(49) Install needle seat assembly (22) in bowl cover and intake needle (21) into needle seat (Figure 10). If intake needle or seat shows wear or damage, replace both parts as needle and seat come in matched sets. Install float and lever assembly (20) and float pin (19).

Float Level Adjustment

Set float level, using float level gauge to carburetor specifications of 15/64". (Figure 17.) Adjustment is obtained by bending the lip (51) on float which contacts needle. Do not bend on front of float in adjusting it, as damage will result. If holes in float lever for float pin are worn or out of round, or float is loaded with gas, replace. Float pin should be replaced if it shows wear.

(50) Lay new body gasket on main body casting and install bowl cover assembly. Install four bowl cover attaching screws (18) and lock washers and tighten evenly. (Figure 9.)

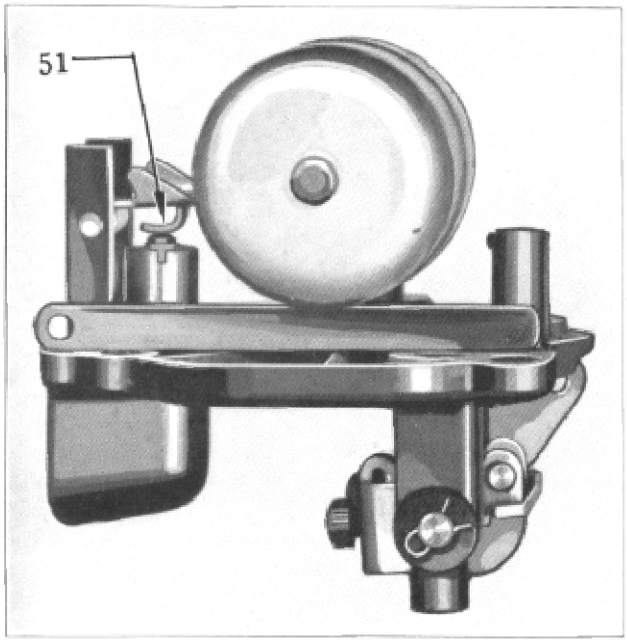

Figure 17

(51) Install pump arm (15) and countershaft assembly and pin spring, at the same time installing metering rod arm (14) and anti-percolator arm (16) (Figure 9). If holes in arm are worn or countershaft is loose on arm, replace assembly.

(52) Install pump connector link (11) and pin spring with pin spring at upper end (Figure 9). Pump has two settings, long stroke for cold temperatures and short stroke for summer or hot temperatures. Vent hole is in bowl cover beneath pump arm.

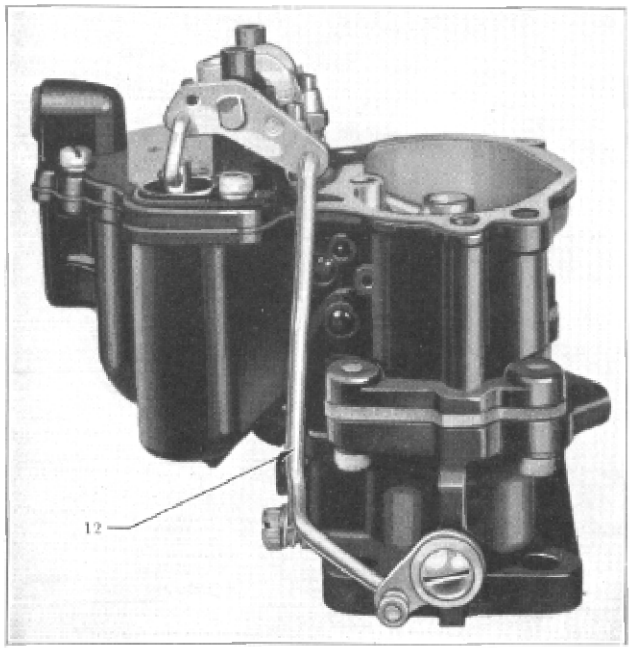

Figure 18

(53) *Pump Adjustment:* With pump connector link in short stroke (lower hole) adjust throttle connector rod (12) by bending to give 15/64" pump stroke (piston travel) (Figure 18). Full pump stroke is obtained by moving throttle from closed to wide open position. Travel can be checked by marking shaft at wide open throttle position, and fully closed position, and gauging distance between marks.

(54) *Metering Rod Adjustment* should be made when reassembling carburetor or when leaner than

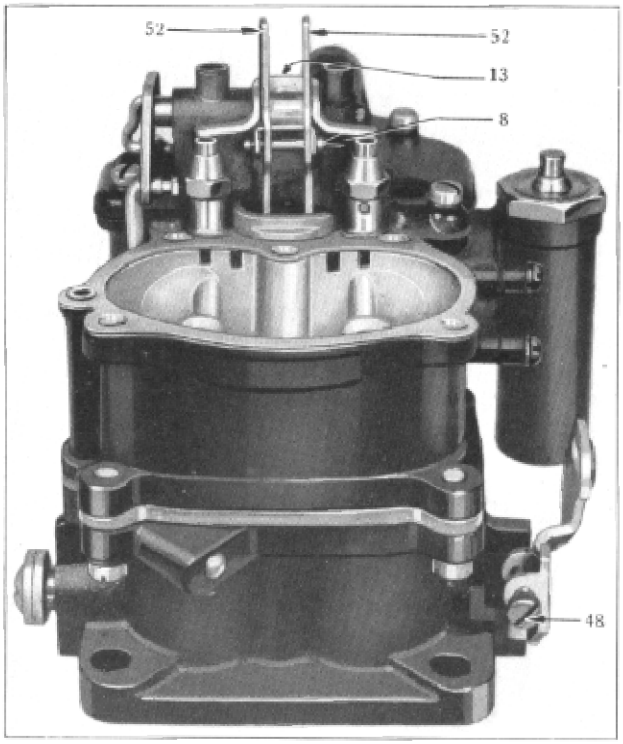

Figure 19

standard rods are installed. (Do not disturb pump adjustment). Correct setting of metering rods is important. Procedure is as follows:

A. Remove air horn and climatic control assembly (Figure 19).

B. Back out throttle lever adjusting screw (48) so that throttle valves close tight, and loosen anti-percolator arm screw (13) (Figure 19).

C. Remove pin spring from metering rod pin and slide the pin from metering rod arm, taking care that pin spring and metering rod springs are not bent or lost. Lift out metering rods and remove brass metering rod disc retainer (17) (Figure 9) by loosening small brass screw. Remove, but do not lose the two small metering rod discs beneath this plate.

D. Insert two metering rod gauges (52), tool No. T 109-27 (included in Tune-up Kit) in place of metering rods, seating tapered end in metering

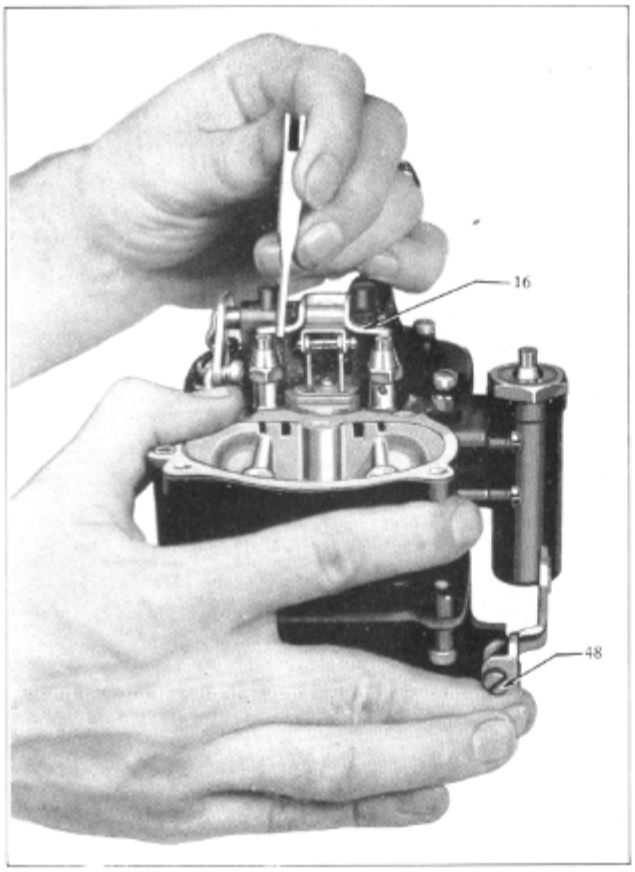

Figure 20

rod jet. Put metering rod pin (8) in place in metering rod arm (Figure 19). Turn metering rod lever (14) on shaft until metering rod pin (8) rests at bottom of notches in metering rod gauges allowing for .005 inch variation on either gauge. Tighten anti-percolator arm screw (13) with metering rod arm in this position.

E. Remove gauges and replace metering rod discs, retainer (17) and screw. Install metering rods, spring and pin and connect metering rod spring. Graphite grease should be put in holes so that pump arm shaft operates freely.

Anti-Percolator Adjustment

(55) Back out throttle lever adjusting screw (48) (Figure 20). Anti-percolator should be checked after metering rod setting and installation of metering rods on carburetor.

(56) Do not disturb metering rods or pump adjustments.

(57) With throttle valves tightly closed adjust lips (16) (Figure 20) on anti-percolator arm to depress anti-percolator stem so indicator line (on stem) is .015" above top of anti-percolator plug. Since there are two anti-percolator units on this carburetor, great care must be taken so that an even adjustment is made on both lips. Use bending bar included in Tune-up Kit as shown in Figure 20, while holding throttle closed.

(58) Install air horn assembly. Tighten screws evenly. (Do not forget screw inside bore of air horn.)

(59) Install dash pot arm, pin and screw assembly. Then install dash pot connector link and pin spring.

Adjustment of Unloader

(60) With throttle wide open the distance between upper edge of choke valve and wall of air horn should be ¼-inch (Figure 21). Check with ¼-inch drill. Adjustment can be made by bending lip (53) on fast idle connector link. If unloader is adjusted properly, with throttle wide open move choker valve wide open and choker valve will be locked in wide open position. Closing the throttle will release choker valve. Choker trip lever is notched out for this setting.

Fast Idle Adjustment

(61) Hold choker valve tightly closed and adjust fast idle arm screw (4) (Figure 22), to give .012 to .018-inch opening between edge of throttle valve and bore of carburetor side opposite port. When the

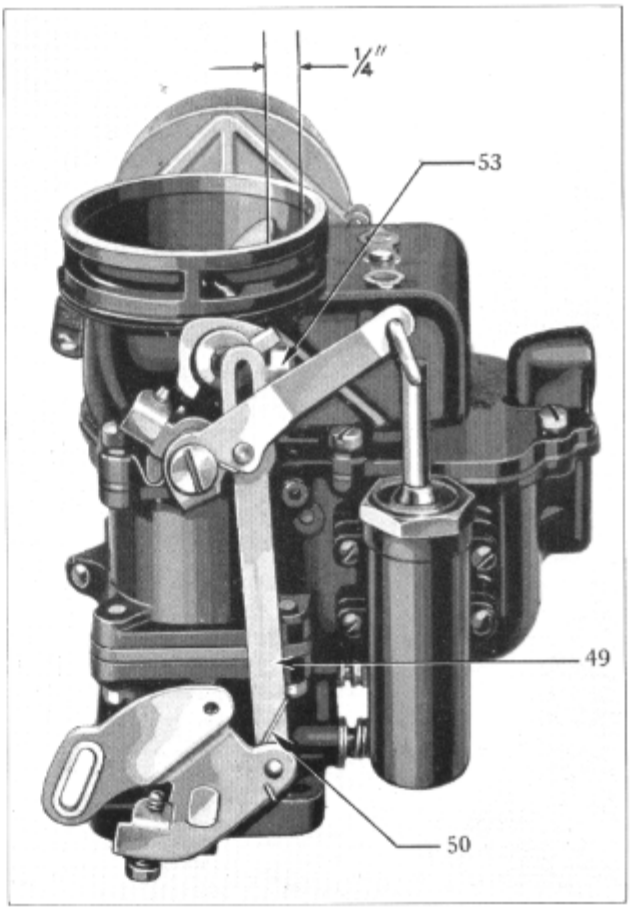

Figure 21

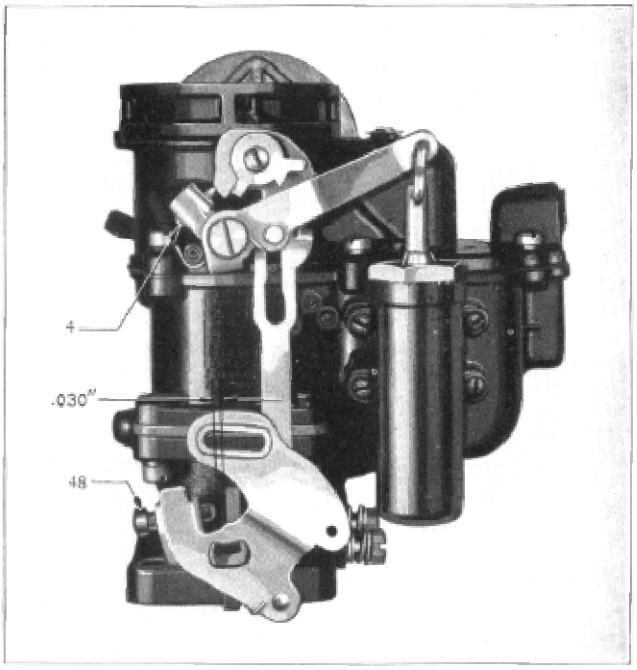

Figure 22

carburetor is on the car and the slow idle screw (48) adjusted to seven miles per hour, proper adjustment of the high idle can be made by turning the high idle screw until the throttle stop screw (48) is .030" from the stop as indicated in Figure 22.

Carburetor Service Inspections

(62) If *carburetor loads* after considerable service, float level should be checked. Wear on lip of float lever will raise float level. Float level may be reset by bending lip of float lever down to raise float level or bending lever up to lower float level. Only a very slight bend is needed.

(63) If *motor stalls* while idling, reset throttle adjusting screw and idle adjusting screw ¼ to ¾ turns open. If this adjustment does not correct the trouble, remove low speed jets and clean thoroughly with compressed air. Examine and see that jets seat air-tight in body casting, top and bottom. If not, replace with new jets of identical specifications. *Never change a low speed jet from one carburetor to another.*

(64) *Poor acceleration* may be due to damaged or worn plunger leather in accelerating pump, loose plunger, corrosion or sediment in pump cylinder or bent pump arm (parts which may be replaced at small cost). Pump stroke is adjustable for high or low temperatures. Set to longest stroke for cold weather, short stroke for hot weather driving.

If plunger is removed from accelerating cylinder, always use loading tool in reassembling to avoid damage to plunger leather.

(65) Pump jets and check valves should be removed and cleaned with compressed air. However, it is usually advisable to replace the pump jets and check valves, as their cost is nominal. All jets and check valves must be seated gasoline tight.

CLIMATIC CONTROL SERVICING INSTRUCTIONS

The climatic control used on the Duplex Carburetor is identical in principle and operation with those used on the single carburetors. The design differs slightly, particularly in the interconnecting linkage.

Figure 6 shows the unit with the cover and thermostatic coil removed showing the various parts. The hot air passage from the housing through the carburetor body to the intake manifold is clearly shown.

To Disassemble

Do not attempt to service air horn and climatic control assembly on the carburetor. Remove from carburetor as instructed in servicing instructions.

(66) Remove screw that holds choker trip lever (F) (Figure 23). Choke shaft washer, choke trip lever and fast idle cam and collar assembly can then be emoved.

(67) Remove two thermostat housing attaching screws (B) and lock washers (C) and thermostatic coil and housing assembly (A) (Figure 24).

(68) Remove two choke valve screws (G) and choke valve assembly (Figure 23).

(69) Move choke piston lever (H) counterclockwise to remove choke piston (I) then remove choke piston lever and shaft assembly (H) (Figure 24).

(70) Remove three piston plate attaching screws (Figure 24).

(71) Remove piston plate (D), port plate (J), piston plate strainer (E), cork insulator disc (L), piston plate housing (K), piston plate housing gasket and hot air passage gasket (Figure 25).

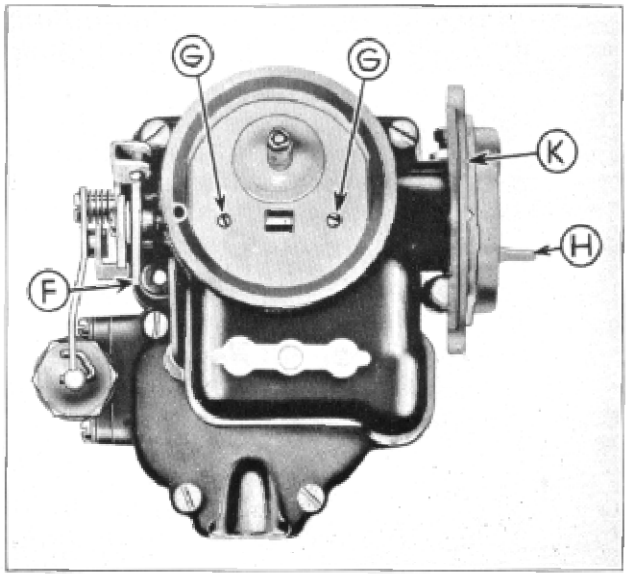

Figure 23

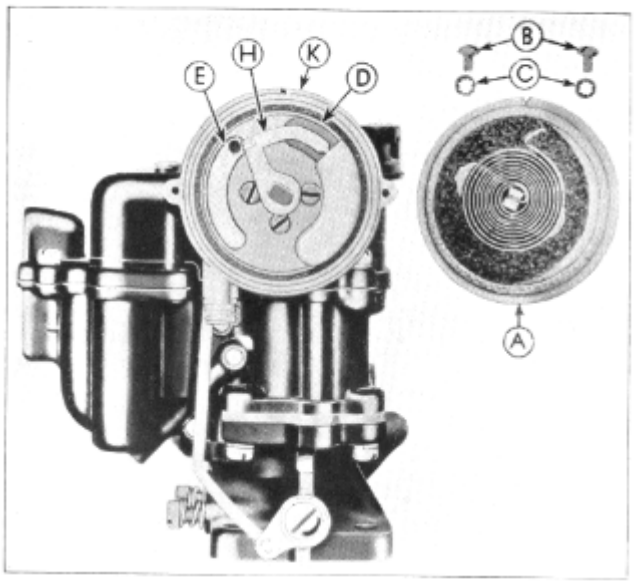

Figure 24

To Reassemble

Before reassembling, wash all parts, *except cork pieces and coil and housing assembly*, in clean gasoline. Then blow through all passages with compressed air. Remove all foreign substances from air horn and parts to allow all parts to work freely. Use all new gaskets. Replace all worn or damaged parts with new. Then proceed as follows:

(72) Install new cork insulator disc (L) in piston plate housing (K) (Figure 25). Make certain that cork disc is installed so that small hole in cork fits over raised boss. Install port plate (J) in grooved recess in piston plate (D) and install piston plate strainer (E). Install piston plate, screen and port plate to piston plate housing. (Be sure screen is installed with hole to top.) Install piston plate housing gasket and hot air passage gasket and attach to air horn with three attaching screws. Use all new gaskets. If strainer is clogged or damaged, replace.

(73) Install choke piston lever and shaft assembly (H) through air horn and climatic control assembly. Turn shaft with lever ¼ turn counter-clockwise from vertical position and install bakelite choke piston (I) on lever and turn shaft so that piston enters housing.

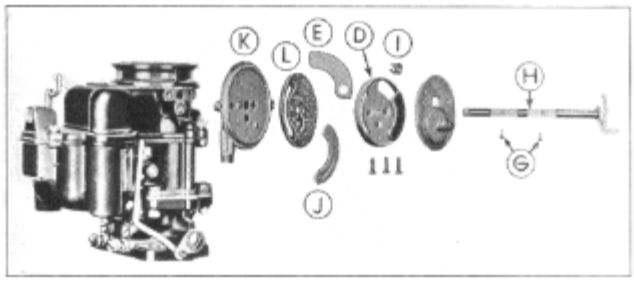

Figure 25

(74) Install choke valve assembly, using new choke valve screws (G), making certain that valve does not bind or rub on inside of air horn bore. Tighten screws securely.

(75) If cork insulator strip inside of climatic control housing is shrunk or torn, replace with a new one to insure a tight seal completely around inside of housing. Do not attempt to alter shape or position of coil, or remove coil from housing. If this assembly is damaged in any way, replace with new. Part number is stamped plainly on face of housing.

(76) Install thermostatic coil and housing assembly (A) with label downward. Insert attaching screws (B) and lock washers (C) part way and then turn housing counter-clockwise until pointer on piston

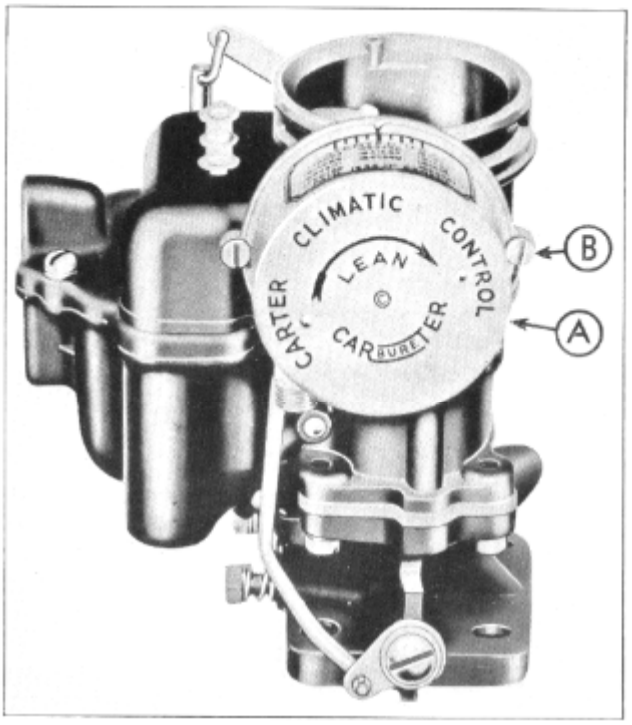

Figure 26

plate housing and notch in coil housing are in line (see Figure 26), then tighten screws. Instructions for leaner or richer settings are clearly stamped on housing.

(77) Install fast idle cam and collar assembly, then choke trip lever, choke shaft washer and attaching screw, tighten screw. If parts are damaged, replace.

(78) Install air horn and climatic control assembly with two air horn attaching screws and lock washers on outside, and blank disc check plug assembly under choke valve in inside of air horn. Tighten screws and check plug securely.

(79) Install fast idle arm spring, fast idle arm pin and screw assembly and fast idle arm attaching screw tightly on air horn.

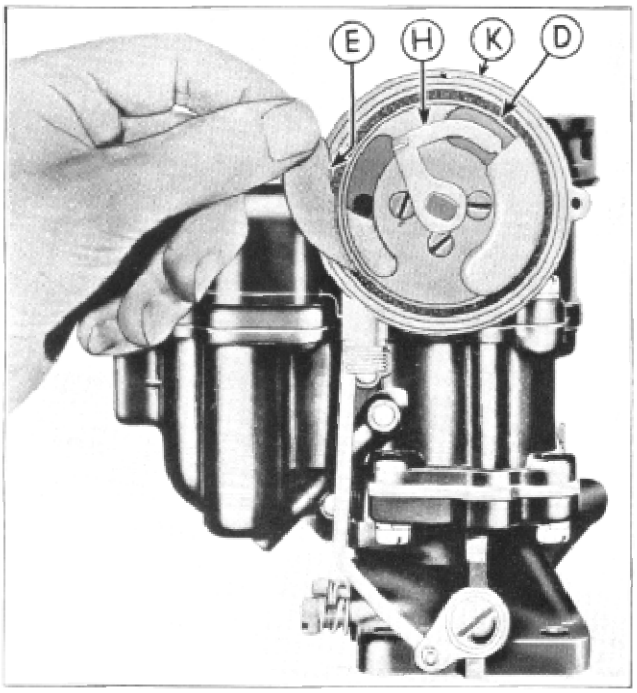

Figure 27

CAUTIONS

When reassembling choke valve, make certain it is in perfect alignment with air horn bore. If it is not, choke will stick in its closed position and will have a tendency to drag on air horn throughout its range.

When reassembling carburetor to motor, make certain flexible tubing is properly connected. An air leak at this point will prevent climatic control from functioning properly.

Thermostatic coil and housing assembly of climatic control has marked calibrations on its top for proper adjustment (Figure 26). When reassembling, place markings to bottom of unit, then install retaining screws. Do not tighten. Revolve housing assembly counter-clockwise (to left) until spring tension is felt on choke valve. Then set center mark on coil housing in line with mark on piston plate housing. Tighten retaining screws. The position of choke valve will be governed by existing temperature. On a warm day choke valve might be open slightly. On a cold day choke valve is completely closed.

Adjustments

Directions for adjustment (lean or rich) is clearly marked on housing. For average driving and climatic conditions, center index mark on coil housing should be in line with pointer. (See Figure 26.)

Action of climatic control during warm-up period is affected by grade of fuel used.

Make no adjustment until motor is cold.

If cold motor shows a tendency to run lean during the warm-up period turn housing counter-clockwise one mark at a time to richen it until desired results are obtained.

If cold engine has a tendency to load or run rich during the warm-up period, revolve choke housing *clockwise* one mark at a time to lean it out, until desired results are secured.

These adjustments should be made with care and between adjustments *motor must be thoroughly cooled off*. At least four hours should be allowed to cool motor.

If the engine continues to load during the warm-up period after making an adjustment of two or three graduations lean, proceed as follows:

(80) Remove thermostatic coil and cover assembly.

(81) The choke valve should fall wide open of its own weight. If it does not, free up any binding on the shaft of valve and clean the bakelite piston.

(82) Loosen the three piston plate screws and withdraw the screen (E) (Figure 27), clean and replace with hole in screen at top.

(83) See that flexible tube from manifold is properly connected to piston plate housing and that there are no air leaks at this point.

(84) Reassemble thermostatic coil and housing and readjust.

SINGLE CARBURETOR SERVICE

Disassembly

When disassembling or reassembling the carburetor, particularly when removing or installing plugs and jets, always use screw drivers that fit the screw slots. Improper screw drivers or improper handling will damage the parts with the possibility of

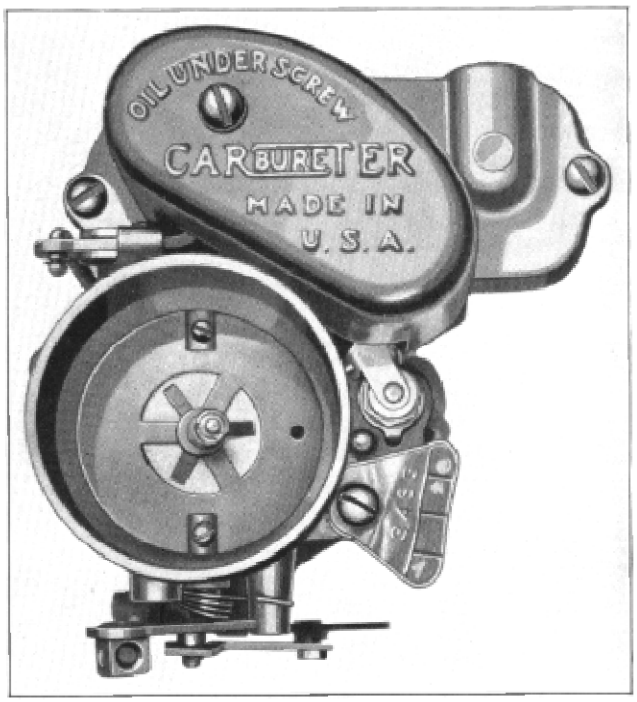

Figure 28

partial clogging of passages either due to the damage or shavings cut off the parts. The Hudson Tune-Up Kit J-819-B includes four special screw drivers to handle the carburetor work as well as the special gauges necessary for ad'ustment.

After the carburetor is off the car proceed with the disassembly as follows:

(85) Remove dust cover (D), lock-washer and attaching screw (Figure 28).

(86) Remove both pin springs (lower and upper) on connector rod, to remove rod, on front of carburetor.

(87) Remove pin spring and connector link that connects accelerating plunger to operating arm.

(88) Remove pin spring from choke lever pin and disconnect upper end of high idle link.

(89) Remove main nozzle plug and unscrew nozzle. Do not lose nozzle gasket, or plug washer (copper). *Main nozzle must always be removed before removing air horn assembly.*

(90) Remove both attaching screws on air horn. Do not lose lock washers.

(91) Remove bowl cover attaching screw, that holds throttle retard plunger arm and bracket assembly. Remove assembly. Also remove pin springs from plunger connector link.

(92) Remove pin spring and connector link that connects throttle retard plunger shaft to arm assembly.

(93) Remove pin spring and unhook metering rod spring, then remove metering rod and disc from bowl cover.

(94) Remove pin spring and throttle shaft dog spring (front of throttle shaft) to remove throttle connector rod.

(95) Remove bowl cover attaching screw, bowl cover, and lift off bowl cover gasket. Remove pump arm and countershaft assembly by revolving one-half turn on bowl cover. Remove float, pin and pump cylinder bushing gasket and needle and seat from bowl cover.

(96) Remove accelerating pump plunger assembly and pump spring

(97) Remove metering rod jet and gasket assembly.

(98) Remove anti-percolating plug and rocker arm assembly with a 7/16″ wrench.

(99) Remove disc check plug assembly and pump jet (top of body at back)

(100) Remove dash pot plunger, cylinder and gasket with ⅞″ wrench.

(101) Loosen up screw to remove throttle shaft arm and throttle shaft dog. (Front of throttle shaft.)

(102) Remove low speed jet. Do not lose copper washer. (Right, below main jet plug.)

(103) Remove accelerating pump ball check passage plug, strainer and both intake and discharge ball check assemblies. (Left, bottom float chamber.) Do not lose copper washer from plug.

(104) Remove throttle valve screws, valve, throttle shaft and lever assembly.

(105) Remove idle port plug, (right of body above mounting flange), idle adjustment screw and spring (right of body).

To Reassemble Carburetor

Before reassembling carburetor, clean casting and all carburetor parts with clean gasoline, using a clean pan. Do not immerse cork parts in gasoline. Then blow through all passages in casting with compressed air. Blow off each part before installing it in carburetor. Use all new gaskets.

Check all parts to carburetor specifications. If any carbon is in the bore of the carburetor, remove it before installing parts.

(106) With carburetor body flange facing up, install throttle shaft and lever assembly. Then back out throttle lever adjusting screw. If throttle shaft is worn or lever is loose on shaft replace it.

(107) Install throttle valve using *new* valve screws. The trade mark on the throttle valve should be facing up and to the idle port side. With the valve screws loose, tap throttle valve lightly to centralize it in the bore of carburetor. Hold valve in place with fingers. Then securely tighten screws. Be sure throttle lever adjusting screw is backed off so valve can seat.

(108) Install throttle shaft dog on front end of throttle shaft and then throttle shaft arm and screw assembly. Set arm so throttle will move freely and tighten screw. If holes in arm or dog are worn replace the parts.

(109) Install low speed jet. Be sure copper washer is seated in casting, and metering hole in low speed jet is opened. Install tightly so low speed jet seats at both ends. If low speed jet shows wear, replace with new.

(110) Install accelerating pump discharge ball, check assembly first and then intake ball check assembly. Be sure checks seal. They can be tested before installation by blowing the ball aginst the seat. Ball should work freely. If they leak or ball sticks, replace them. Install tight so they seat in casting. Be sure copper washer is seated in casting and then install ball check strainer in plug and plug in casting. If strainer is clogged or damaged replace it.

(111) Use dash pot loading cylinder (included in tune-up kit) and install throttle retard dash pot plunger assembly into dash pot cyl'nder. Then install dash pot cylinder gasket and tighten cylinder using ⅞″ wrench. If leather shows wear or damage, replace dash pot plunger assembly.

(112) Install idle hole plug, idle adjusting screw and spring. No copper washer is used on plug. If idle adjusting screw is burred, replace it. Adjust idle screw ½ turn open from seat.

(113) Install main jet assembly. Use a new gasket soaking it in warm water for 15 minutes before installing. If metering rod or jet shows wear, replace metering rod jet and metering rod.

(114) Install accelerating pump spring first and then pump plunger and rod assembly, using loading cylinder (included in tune-up kit). Put a little castor oil around leather to keep it from becoming dry so leather will seal in pump cylinder. If leather is cracked or worn, replace. Be sure plunger nut is tight so pump leather does not leak on plunger assembly.

(115) Install accelerating pump jet tightly. Be sure hole in jet is open. Check disc check assembly. Be sure disc check works free in seat and holds when blowing against it. If either pump jet or disc check assembly shows wear, replace it. Be sure cross hole in casting leading into bowl of carburetor between pump jet and disc check assembly is open.

(116) Replace bowl cover if it shows wear or is bent or warped.

(117) Install float valve needle seat assembly, using a new gasket which has been soaked in warm water, in bowl cover and insert needle into needle seat. Install float and lever assembly and pin. Then set float level, using float level gauge, to carburetor specifications of ⅜″ (Figure 29). Be sure the gauge rests on the cover gasket flange. Adjustment is obtained by bending the lip on float arm which contacts needle. Do not bend on float in adjusting it as damage will result. If intake needle or seat shows wear or damage, replace both. If holes in float or float pin are worn or out of round, or float is loaded with gas, replace float. Float pin should be replaced if it shows wear.

(118) Install a new pump cylinder bushing gasket in bowl cover.

(119) Install pump arm and countershaft assembly on bowl cover. If hole in arm is worn or out of round, or countershaft is loose on arm, replace assembly. Be sure vent hole is opened in bowl cover. (Below countershaft.)

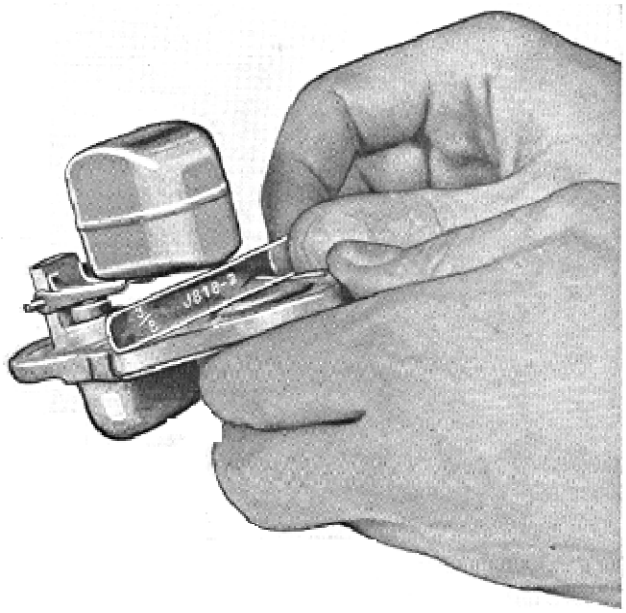

Figure 29

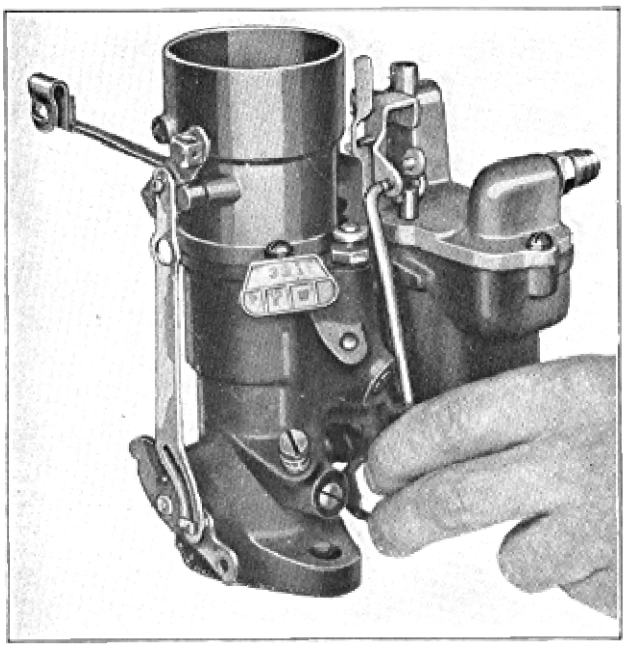

Figure 30

(120) Lay bowl cover gasket on body casting. Install bowl cover, tighten bowl cover with attaching screws and lock washers pulling screws down evenly.

(121) Install pump connector link and pin spring. Pump has three settings: long stroke for extremely cold temperature, center and short stroke for summer or hot temperatures.

Metering Rod Adjustment

(122) Correct setting of metering rod is important. Metering rod position should be checked when carburetors are serviced or when leaner than standard rods are installed. Correct procedure is as follows: (123) Insert gauge (Part T 109-25) (included in tune-up kit) in place of metering rod, seating beveled end in metering rod jet. Hold gauge vertical to insure seating. Figure 30.

(124) Metering rod pin in pump arm should rest on top of gauge with throttle fully closed (adjusting screw backed off) and upper end of connector rod centering freely in its hole in pump arm. If it does not, bend lower end of throttle connector rod so that top end centers freely in hole.

(125) Remove gauge, replace metering rod and disc and metering rod spring. Be sure metering rod is in jet. If metering rod shows wear, replace it.

Anti-Percolating Valve Adjustment

(126) Install anti-percolating plug and rocker arm assembly using $\frac{7}{16}$″ wrench. To adjust anti-percolator: set throttle valve at .030″ opening between edge of valve and bore of carburetor on same side as port hole. Use a gauge .030″ diameter (tool J-882 included in tune-up kit). Be sure to place gauge in front of idle port hole (insert Figure 25).

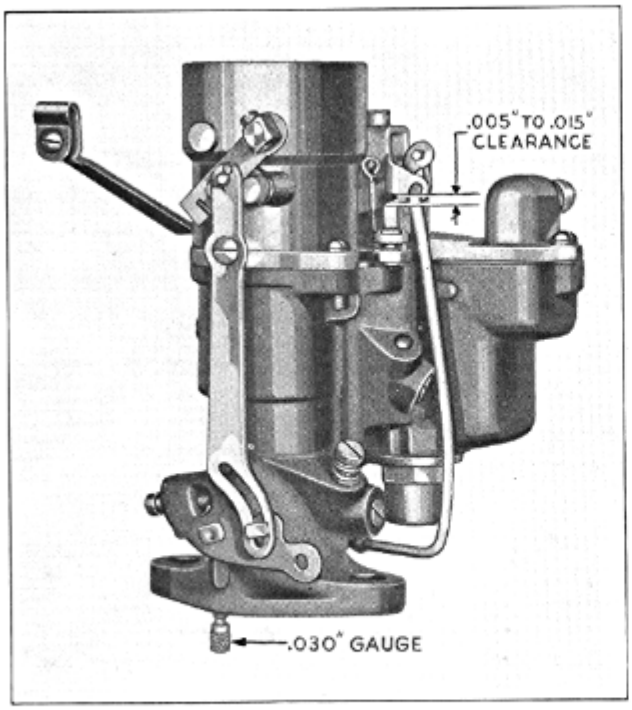

Figure 31

Adjust rocker arm for .010" clearance (plus or minus .005") between rocker arm lip and pump arm (Figure 31). Check with narrow feeler gauge.

To Assemble Air Horn to Body

(127) Install air horn assembly and throttle retard dash pot arm and bracket assembly by removing one of the bowl cover attaching screws. Tighten air horn and bowl cover attaching screws and lock washer.

(128) Install connector link on throttle retard dash pot plunger shaft and dash pot arm and bracket assembly, and then insert pin spring.

(129) Install dash pot connector rod and pin springs being sure of placing the bend in rod towards the body flange. Rod connects dash pot arm and bracket assembly to throttle shaft dog. If rod shows wear or damage, replace.

(130) Check to see that old main nozzle gasket has been removed. Install new nozzle gasket on nozzle and install nozzle tightly. If nozzle has been damaged, replace. If the nozzle is not drawn securely into position with one new gasket it will cause excessive gas consumption due to leakage around the nozzle and a lower than normal nozzle position.

(131) See that copper washer is properly placed in casting and install nozzle plug.

The final adjustment of the carburetors is included in the tune-up chart which should be referred to for all engine tune-up work.

After a carburetor has been rebuilt the idle adjusting screw or screws should be turned into their seats and backed out ½ turn and the engine started. After the engine is warm and the throttle stop screw set to give an idle of approximately 7 m.p.h. (350 R.P.M.) back the screw out until the engine hesitates then turn in to the maximum steady vacuum gauge reading. Move the two idle adjusting screws together on the Duplex Carburetors.

The final adjustment of the idle adjusting screw on the single carburetor should be from ¼ to 1 turn off the seat while the screws of the Duplex should be from ¼ to ¾ turns of their seats.

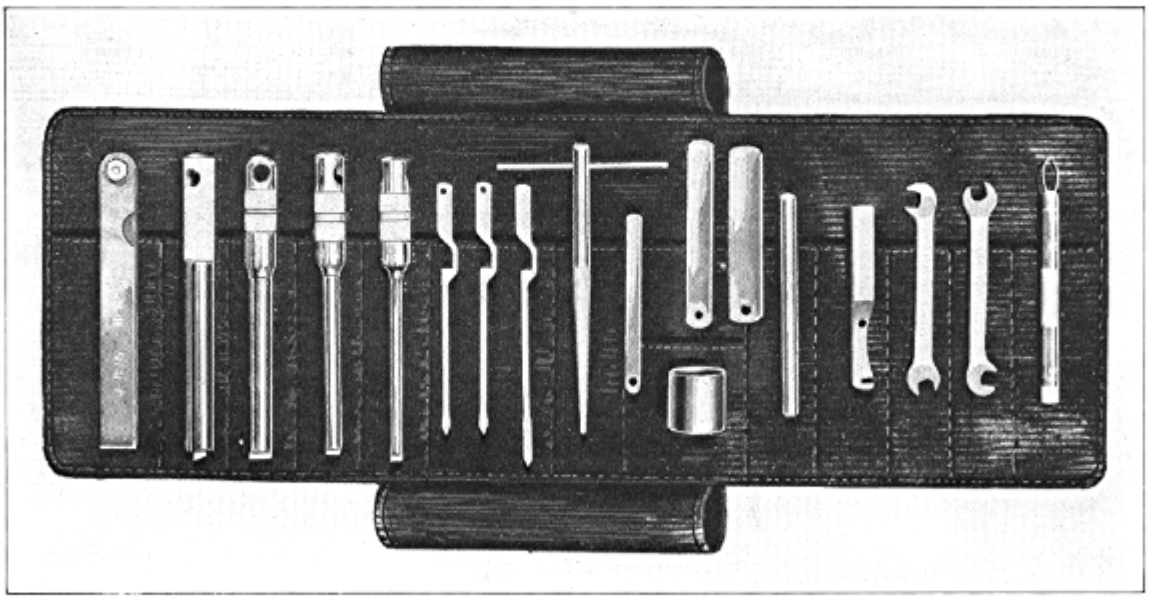

J-819-B Tune-up Kit—See Page 30—Service Tool Manual
Order from Hinckley Myers Co.—Jackson, Michigan

ELECTRICAL

STARTING, LIGHTING AND IGNITION

While the starting, lighting and ignition units will operate 10000 or 20000 miles and even more without giving trouble, their original high efficiency gradually drops during this long period without attention; and repairs, when necessary, are more costly. If on the other hand, inspections with minor adjustments are made of the various electrical units at regular intervals, their original high efficiency is maintained much longer and costly repairs are avoided because the natural, gradual wear of the various parts will be noted before serious damage has been done. It is recommended that tune-up inspections be made each 3000 to 5000 miles of operation and a complete check made each 10000 to 12000 miles.

GENERATORS

Tune-Up Inspection

The tune-up inspection should include an inspection of the condition of the commutator and brushes, a check of the bearings for wear, lubrication of the bearings, a check of all connections in the charging circuit to be sure they are tight and making a good electrical contact, a check of the generator output and finally a check of the generator and line voltage.

Commutators which are dirty or discolored should be polished with 00 sandpaper. If the commutator is rough or worn so that the mica and copper bars are nearly even or if the brushes are badly worn the unit should be removed for bench repairs.

The commutator end bearings are absorbent bronze plain bearings while the driven end has a ball bearing. The commutator end bearing can be checked for wear by lifting on the armature to see if there is any noticeable play.

Generators are provided with hinged top oilers over the bearing at either end. Lubrication should include a few drops of light engine oil in each oiler (A), (Figure 2).

Check fan belt adjustment. The sag should be 1" as shown at (E) in Figure 2.

Checking Output

An accurate reading volt-ammeter having voltage

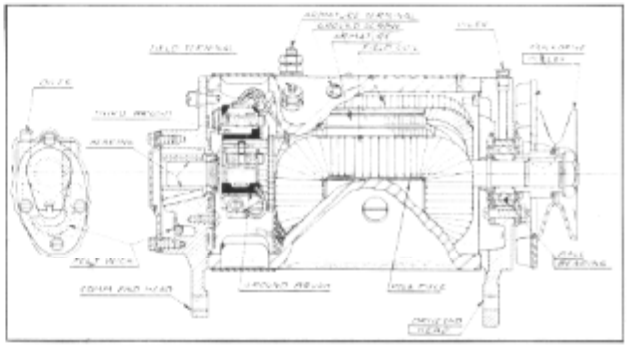

Figure 1—Generator

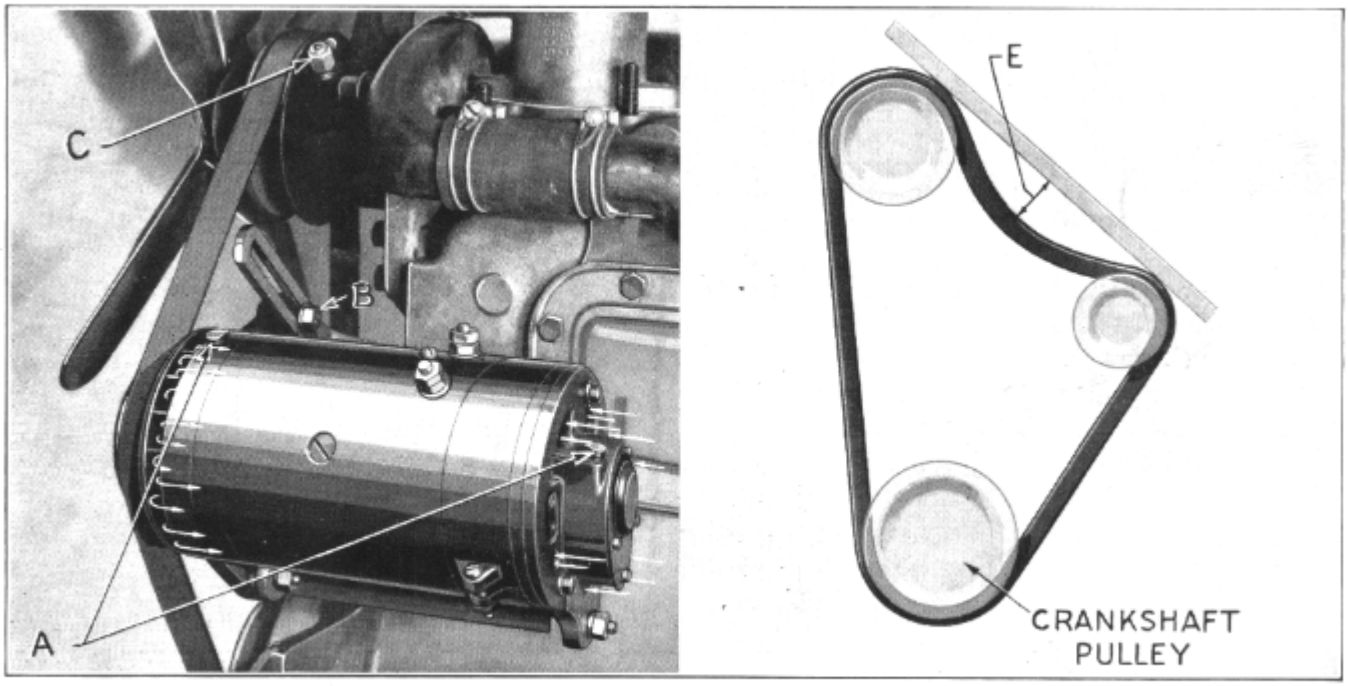

Figure 2—Generator Hub and Fan Belt Adjustment

graduations to read 1/5th volt and amperage graduations to read ½ ampere is absolutely essential to make electrical tests. The leads to the ammeter should be of at least No. 12 stranded wire and as short as possible. A variable rheostat for inserting a resistance in a circuit is also very useful. Connections to the test meters must be clean and tight if accurate readings are to be had (Figure 3).

To test the generator on cars having a circuit breaker only (Figure 5), connect the ammeter in series between the generator terminal and the wire removed from that terminal; connect the voltmeter across the generator terminal and a clean, unpainted ground on the engine or frame. Cars which are equipped with a regulator, either two-charge (Figure 6) or vibrating voltage type (Figure 7) should

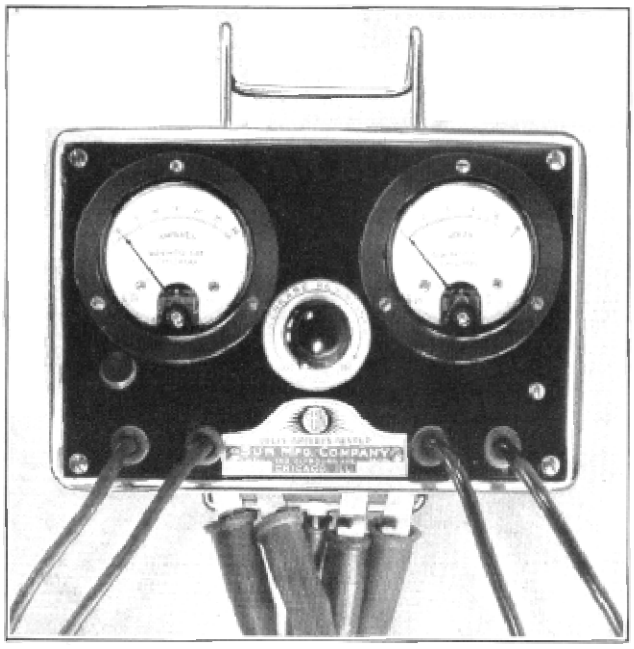

Figure 3—Volt Ammeter—J-795

have the field terminal post grounded to the generator frame while generator charging rate tests are being made (Figure 4).

After the meters are connected, start the engine and set the throttle so that the engine will run at a speed equal to 25 or 30 M.P.H. in high gear. Run for several minutes or until no further rise in the voltage is noted. Then by varying the speed of the engine, generator performance can be checked against the specifications for the particular unit under test and any adjustments needed made. *In checking generator output the voltage reading must be noted as the amperage output varies with the voltage.*

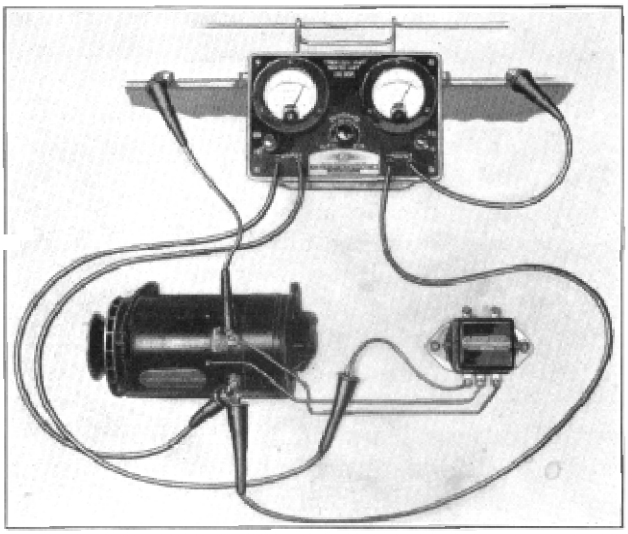

Figure 4—Checking Charging Rate

Complete Inspection

When a complete inspection of the generator is to be made, the unit should be removed from the car and the work done on the bench. Dismantle, thoroughly clean and inspect all parts, replacing any that show excessive wear. At this time the commutator will probably need turning and undercutting. When undercutting be sure to undercut the mica square, the full width of the slot and $\frac{1}{32}$ of an inch deep.

The commutator end bearing should be checked for wear according to the specifications for the generator being worked on. The drive end bearing, after thorough cleaning, should be packed not over one-half full with a heat resisting grease before being assembled in the drive end head.

When new brushes are installed, they should be carefully sanded in so as to have at least a 75% bearing on the commutator and then run in long enough to have a perfect fit before any attempt is made to set the generator output.

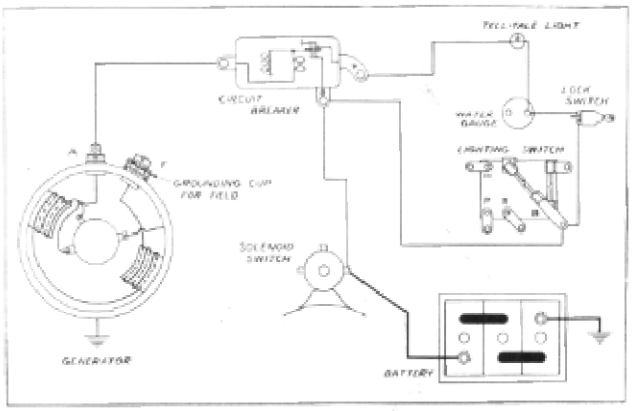

Figure 5—Charging Circuit (without Regulator)

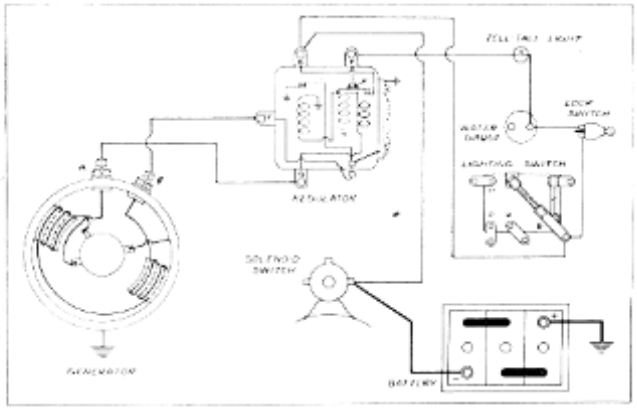

Figure 6—Charging Circuit (with Two Step Regulator)

After assembling, the generator should be given a complete bench test before being installed on the car. While testing, set the third brush for the correct maximum output. (See specifications on pages 8,9 and 10 for the generator that is being tested.)

DISTRIBUTORS

Tune-Up Inspection

The tune-up inspection of the distributor should include the removal and cleaning of the inside of the distributor cap, removal of the rotor, inspection of the breaker points with refacing and respacing if necessary, a check of the automatic governor to see that it is working free, a test of the condenser, lubrication and finally a check and resetting if necessary of the timing of the distributor to the engine. At the same time where proper equipment is available the ignition coil performance should be checked.

Breaker points that show a grayish color and possibly are only slightly rough with no pit or crater showing and which have within .002" proper maximum gap need not be touched for refacing or

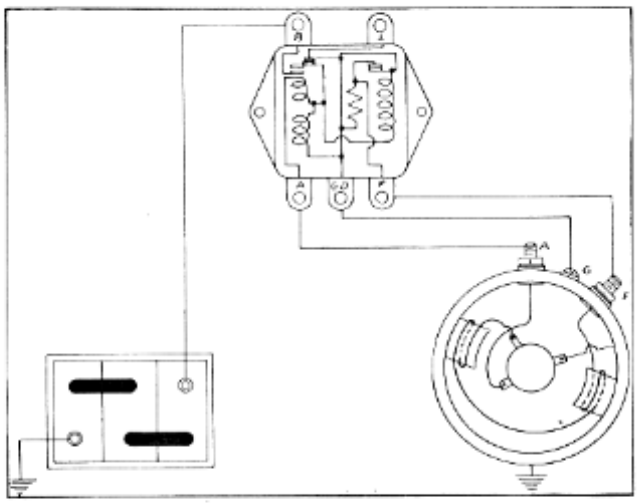

Figure 7—Ch arging Circuit (with Vibrator Regulator)

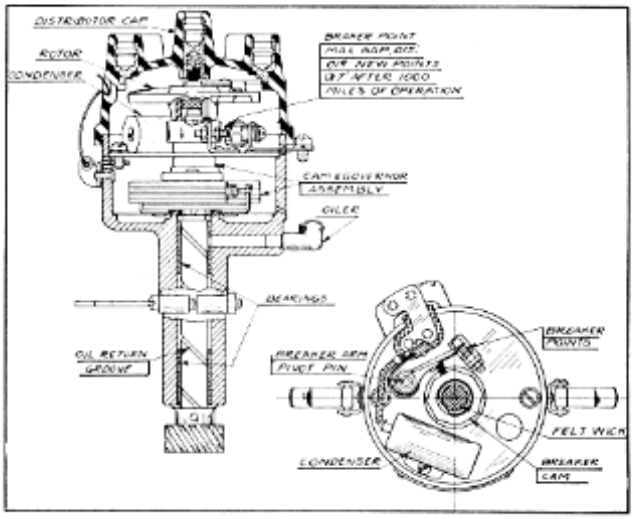

Figure 8—Distributor (8 Cyl.)

adjustment. However, if the breaker points must be readjusted they should always first be refaced so as to have a smooth, flat contact with each other Also be sure they are properly aligned so as to have full face contact.

The governor can be checked for working free by turning the breaker cam in the direction of rotation as far as it will go and releasing. When released it should immediately return to its original position with no drag or hesitancy.

A test of the condenser should include both capacity and leakage. This can only be done with proper test equipment.

Lubrication (Figure 10) should include the adding of several drops of light engine oil in the oiler on the outside of the housing, a film of light grease on the breaker cam, one drop only of light engine oil on the breaker arm pivot pin and the saturating of the felt in the top of the breaker can shaft with light oil on the IGP distributors or the placing of a few drops of light oil in the hole in the top of the breaker cam shaft on the IGB and IGW distributors.

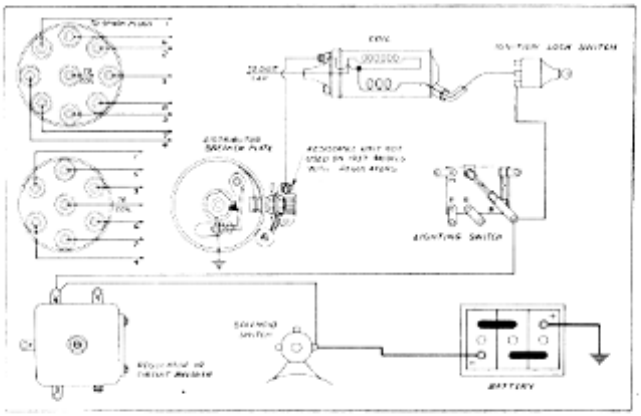

Figure 9—Ignition Wiring Circuit

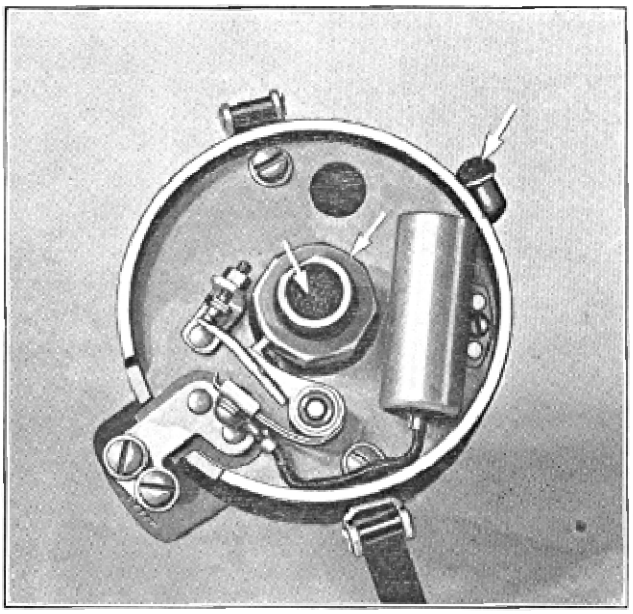

Figure 10—Distributor Lubrication

When the complete inspection is made the bearings in the distributor housing should be thoroughly cleaned, then lubricated before assembling the drive shaft in the housing.

Complete Inspection

The complete inspection should include removal of the distributor from the engine, complete dismantling and cleaning, an inspection of the bearings and breaker cam for possible wear, a check of all points mentioned in the tune-up inspection, reassembling and finally re-installation and complete resetting of the timing to the engine.

No attempt to check or adjust the automatic governor should be made except with an oscillograph so that the occurrence of the spark in degrees can be checked against the speed in R.P.M.

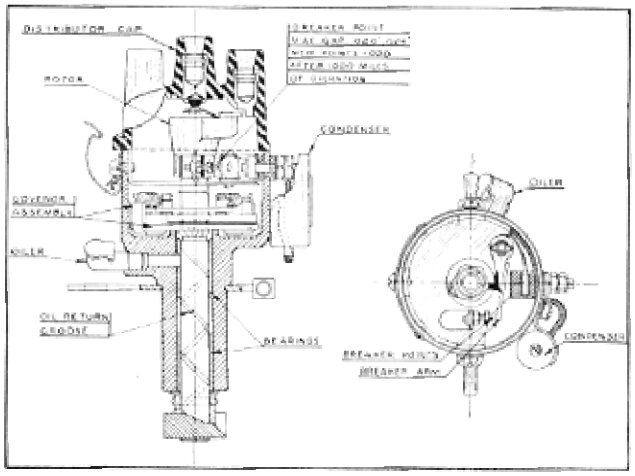

Figure 11—Distributor (6 Cyl.)

The distributor advance curve can be retarded by bending the spring lubs outward and advanced by bending the lugs inward.

Some of the distributors have what is known as a dog leg curve whereby a quick advance is obtained during the lower speeds and a more gradual advance at the higher speeds. Also some of the distributors having this type of an advance have governor weight springs of different tension with a flat auxiliary spring outside of one of the lugs holding the outer end of one of the governor weight springs.

When replacing these springs care must be taken to install the lighter weight spring on the lug having

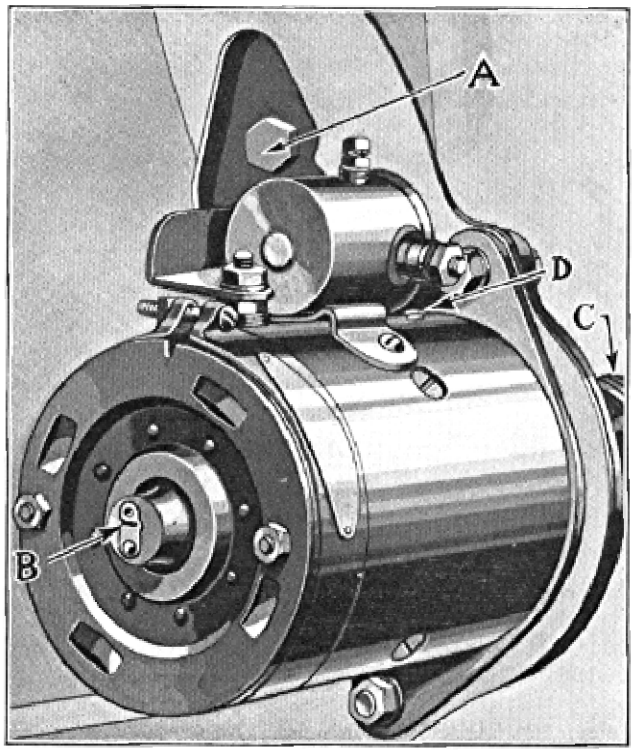

Figure 12—Starting Motor Lubrication

the auxiliary spring back of it. If this is not done, proper advance can not be obtained. As a further precaution to obtain proper governor action it is recommended that governor weight springs always be purchased in sets and both springs replaced.

STARTING MOTORS

Tune-Up Inspection

This inspection should include a check of the brushes and commutator, cleaning of the commutator if needed, a check of the bearings for wear and lubrication of the bearings. The starting switch should be given a voltage drop test for possible burnt contacts.

At the same time the starting circuit should also be given a voltage test to be sure there is no loss of

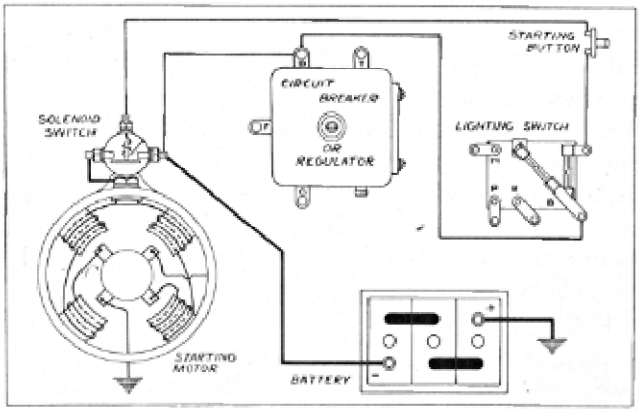

Figure 13—Starting Motor Circuit

starting motor efficiency due to poor or corroded connections or improperly soldered terminals. In making this check, particular attention should be given the ground connection to the frame. (See Engine Tune-up, Section 3.)

All starting motor commutator end bearings are provided with an oil hole accessible by swinging the oil hole cover to one side. This oil hole is located on the end of the bearing housing. Some of the starting motors are also provided with a hinged top oiler located in the frame near the drive end for lubrication of the drive end bearing. Add a few drops of light engine oil in each oiler or oil hole. (B and D, Figure 12.)

Complete Inspection

The complete inspection should include the removal of the starting motor, complete dismantling, truing up of the commutator, installing of new brushes if needed, a check of the bearings with replacement of those that are worn and an inspection of the Bendix drive for worn parts or a distorted spring. The starting switch and starting circuit should also be checked as outlined in the tune-up inspection.

To replace the starting motor grounded brushes it will be necessary to cut the rivets holding the brush holders and brush ground strip to the commutator end plate assembly. When re-riveting be sure the rivets fit the holes snug and that they are riveted tight so as not only to hold the brush holder firmly in place but to secure a positive ground connection for the brushes.

To replace the insulated brushes, unsolder the brush pigtail from the field coil and remove the old brushes. When inserting the pigtail of the new brushes it will probably be necessary to open up the loop slightly in the field coil. Be sure the pigtail is inserted the full depth of the loop after which it should be clinched to hold the pigtail securely before resoldering. A good soldering job must be done to assure full efficiency of the starting motor.

BENDIX STARTER DRIVE

Failure of the Bendix drive to engage the flywheel gear in cold weather indicates the presence of gummy dirt on the screw threads of the Bendix Drive, which must be cleaned off in the following manner:

Press the starter button and release quickly. Repeat until the Bendix pinion is fully meshed with the flywheel gear. With a paint brush dipped in kerosene, brush the screw threads back of the pinion, rotating same slightly. *Very little kerosene should be used. Never use gasoline* because it removes all lubrication.

Start the engine several times in order to work the kerosene into the gum on the screw threads of the Bendix Drive. It is desirable to remove excessive kerosene, after cleaning, by brushing with a dry brush or wiping with a clean cloth.

While the Bendix Drive can be cleaned without removing the starter, it is recommended that the starter be removed before cold weather each year and the screw threads cleaned according to the above instructions.

Never wash the whole Bendix Drive in kerosene or gasoline. Clean only the screw threads. In case the lubrication is cleaned off of the armature shaft under the pinion, it should be relubricated.

The Eclipse Machine Company, of Elmira, New York, who manufacture the device, recommend Gredag No. 31¼ for relubrication. If this lubricant is not available use a few drops of S.A.E. 10 Engine Oil. Do not apply lubricant to the screw threads.

HELPFUL POINTERS

For those that are not entirely familiar with electrical work and the approved methods for handling certain operations the following suggestions may be of help.

Brushes

Whenever new generator brushes are installed they must be carefully fitted to the commutator by

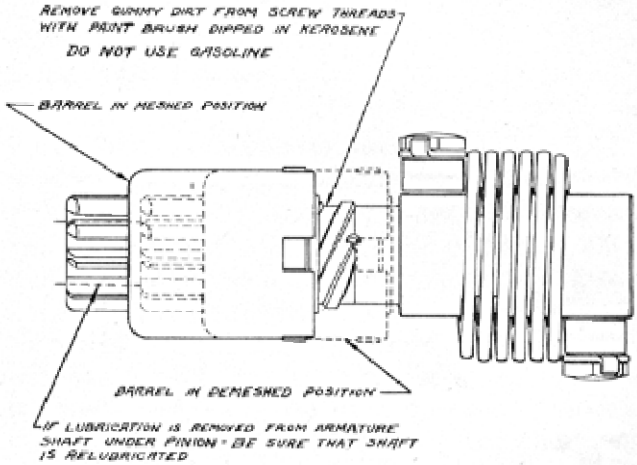

Figure 14—Bendix Drive

sanding to assure at least a 75% bearing on the commutator and then run in for a sufficient length of time to obtain a perfect fit before any attempt is made to set the generator output. To sand in brushes cut a strip of 00 sandpaper the width of the commutator and long enough to wrap about two and a half times around the commutator.

After the generator is assembled slide the sandpaper around the commutator with the sand side toward the brushes. Lap the end under so that it is drawn tight when the armature is rotated in the direction in which it is driven. Be sure the sandpaper is tight on the commutator. Rotate the armature slowly until the brushes show a contact over their entire surface. Due to its smaller size the third brush will seat sooner than the main brushes and as soon as this brush is seated lift it off the sandpaper while finishing the main brushes. This will save excessive wear on the third brush. Also do not sand the brushes any longer than is necessary to obtain a seat as to do so only shortens their useful life. After fitting the brushes remove the sandpaper carefully so as not to cut the edge of a brush and carefully blow out all sand and carbon dust.

Wiring Tests

The electrical system of a car should be considered as a number of separate circuits each working independent of the others although they may have certain wires or parts in common. Thus there is the charging circuit, the starting circuit, the ignition circuit, the lighting circuit, etc. When checking or shooting trouble take each circuit separate and make the necessary tests to prove it O. K. before going on to another circuit.

Possibly 75% of the electrical troubles on an automobile can be traced to excessive voltage. Excessive voltage may be the result of a too high generator charging rate resulting in an overcharged battery, burnt distributor breaker points, short light bulb life, etc. The check of the battery condition and generator charging rate will easily tell if the charging rate is too high.

High voltage is also often caused by poor electrical connections. These can be located by an accurate voltage test.

To check the wiring for high resistance in any circuit first inspect and tighten all connections. Then with an accurate reading voltmeter take a voltage reading at each connection in the circuit starting at the source of current supply and follow the circuit thru to its end. The circuit must be under a load or the current "on" when these tests are made. The source of current supply in the charging circuit is the generator while for all other circuits the source of current supply is the battery.

When making these tests one side of the voltmeter should be connected to a clean, unpainted ground and the other side of the voltmeter to the point where a reading is desired. A variation of not more than .5 volts maximum drop is allowable in a circuit. A greater drop indicates trouble between the last point of normal reading and the first point of low reading.

Whenever any tests are to be made to the generator or charging circuit the generator should be run at a set speed long enough for the voltage to build up to a steady reading before the tests are started.

Meters

An ammeter is always connected in series in the circuit to be tested while a voltmeter is always connected in shunt across the circuit to be tested. To use the ammeter it is necessary to remove a wire from its terminal and connect one side of the meter to the wire just removed and the other side of the meter to the terminal from which the wire was removed. As the ammeter leads must carry the full volume of current flowing thru the circuit the leads should be of ample size so as to cause no resistance to the flow of the current, the connections clean and securely made and the leads as short as possible. As the voltmeter has only a very small

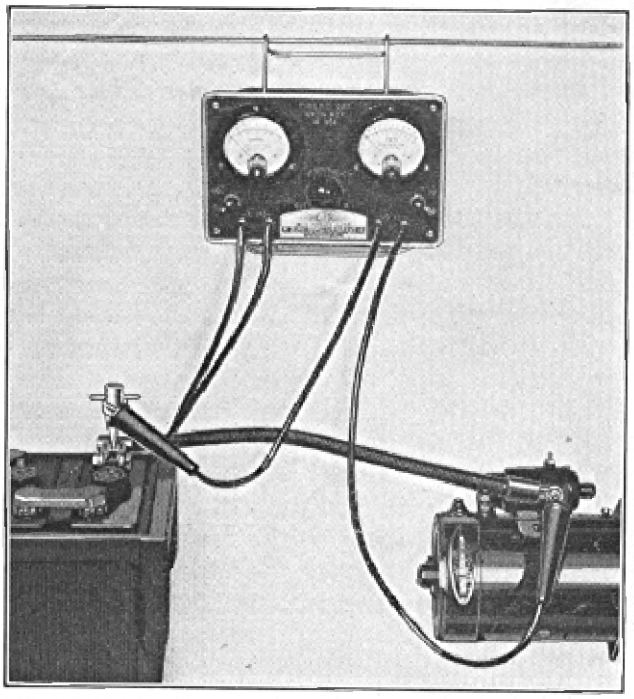

Figure 15—Test Each Circuit Separately—Testing Battery Cable

amount of current flowing thru it these leads need not be as heavy as the ammeter leads. However, connections must be clean and securely made or else a false reading will be obtained. As all circuits use the metal parts of the car such as the frame or engine for one side of the circuit the voltmeter should have one lead connected to a clean, unpainted part of the frame or engine and the other lead to the terminal or wire where the reading is wanted.

SPECIAL INSTRUCTIONS FOR CHECKING TWO-CHARGE REGULATORS

The two-charge regulators which are standard equipment on certain models (See Equipment Chart Page 10) of both Hudson and Terraplane cars can be checked with an accurate reading volt-ammeter having a rheostat to control the charging circuit voltage.

Before making any checks as to the two-charge regulator performance the battery should be inspected for electrolyte at proper level, for terminal connections free from all corrosion, clean and tight and the charging circuit wiring given a voltage test to be sure there are no high resistance connections.

Having checked the charging circuit (Figure 6) to be sure it is in perfect condition, remove the wire from the battery or "B" terminal of the regulator and connect the test ammeter; one side to the regulator terminal and the other side to the wire just removed. Connect the test voltmeter; one side to the regular battery terminal and the other side to a clean, unpainted ground on the engine or frame. The regulator cover must be in place while all tests are being made. Start the engine and set speed for maximum generator charge.

If after running for several minutes the line voltage does not rise sufficiently to cause the two charge regulator to operate, increase the voltage by adjusting the rheostat. When the regulator operates the charging rate will drop approximately one half. If the air temperature surrounding the regulator is 70° or higher the voltage when the regulator cuts the charging rate from high to low should read between 7.8 and 8.1 volts. On the other hand if the air temperature is below 70° the voltage when the regulator cuts from high to low should be between 8.1 and 8.7.

Without changing the rheostat setting gradually reduce the engine speed until the regulator cuts out allowing the generator to charge at its high rate. The voltage reading when the regulator cuts out should be between 1.2 and 1.4 volts below the voltage at which the regulator cut in.

Regulators which are found to operate at voltages outside of the above limits we recommend be referred to an official Auto-Lite Service Station for adjustment or replacement. Regulators can be properly adjusted only where the necessary special equipment is available for complete control of the voltage and the temperature is known and fairly constant.

SPECIAL INSTRUCTIONS FOR TESTING VRD VOLTAGE REGULATORS

To test the VRD vibrating type voltage regulator as used on the 1937 Hudson models and Terraplane model 72, an accurate reading ammeter with heavy, short leads should be connected between the regulator "B" terminal and the lead removed from this terminal, while an accurate reading voltmeter should be connected across the regulator "B" and "GD" terminals.

If the battery is not fully charged (specific gravity at least 1250) the regulator will not become operative and can not be checked unless a resistance is inserted in the charging circuit. If an ammeter with a resistance in series is not available it is necessary to replace the battery with one that is fully charged in order to generate sufficient voltage to test the regulator.

Start the engine and set for a speed equivalent to approximately 30 M.P.H. in high gear. Run the engine for several minutes or until the voltage remains constant before taking any readings. Turn in the resistance until the ammeter reads 10 Amps. The voltmeter reading should now be from 7.4 to 7.9 volts.

If the battery is fully charged, the ammeter should show a reading below the maximum to which it was set and the voltmeter should show a reading between 7.4 and 7.9 volts.

It will be found that the voltage readings will be near the 7.9 limit under cold operating conditions and near the 7.4 limit under hot operating conditions.

Regulators which operate within the above figures are functioning according to the manufacturers' specifications. If a reg uator is found which is not operating correctly it should be removed and exchanged for another through an official Auto-Lite Service Station. Be sure not to break the seal of the regulator as a broken seal voids the exchange privilege.

Ignition System Testing

Complete information on testing the ignition system is included in the Engine Tune-up (section 3).

Hudson and Terraplane—Auto-Lite Equipment

Name and Model	Serial No. Start of Production	Engine No.	Generator	Relay or Regulator	Starting Motor	Starting Switch	Serial No. Start of Production	Distributor	Serial No. Start of Production	Ignition Coil
HUDSON 1934										
LL	S-252000	E-30000	GBK-4602	CBA-4002 & TC-4102A	MAB-4061	SS-4001	.....	IGP-4001A	.....	CE-4304
LT, LTS	S-950000									
HUDSON 1935										
GH Big 6	S-53101	E-70000	GBK-4602-1	TC-4304A	MAB-4060	SS-4001	.....	IGB-4301A	.....	IG-4616
					MAB-4074	SS-4001	S-536449 & E-76665	IGB-4301B	E-73791	.....
HUDSON 1935										
HT Special 8	S-54101									
HU De Luxe 8	S-55101									
HHU Custom 8	S-56101	E-55000	GBK-4602-1	TC-4304A	MAB-4061	SS-4001	.....	IGP-4001A	.....	CE-4606
HTL 124" Special 8	S-57101				MAB-4075	SS-4001	E-63836	IGP-4001B	E-65247	.....
HUL 124" De Luxe 8	S-58101									
HUDSON 6, 1936										
63	S-63101	E-79000	GAR-4701-6	TC-4304A	MAB-4075	SS-4001	.....	IGB-4301B	.....	IG-4633
HUDSON 8, 1936										
64	S-64101									
65	S-65101	E-1000	GAR-4701-6	TC-4304A	MAB-4075	SS-4001	.....	IGP-4001B	.....	CE-4617
66	S-66101									
67	S-67101									
HUDSON 6, 1937										
73	S-73101	90000	GCJ-4803A	VRD-4003A	MAB-4075	SS-4001	.....	IGW-4013A	.....	IG-4644
HUDSON 8, 1937										
74	S-74101									
75	S-75101	18000	GCJ-4803A	VRD-4003A	MAB-4075	SS-4001	.....	IGP-4008A	.....	CE-4625
76	S-76101									
77	S-77101									
TERRAPLANE 1934										
K	S-373000	E-48000	GBK-4602	CBA-4002 & TC-4102A	MAB-4060	SS-4001	.....	IGB-4301A	.....	IG-4311
KU	S-21500									
KS	S-373000	E-48000	GAM-4503	CBA-4002	MAB-4060	SS-4001	.....	IGB-4301A	.....	IG-4311
TERRAPLANE 1935										
G Special	S-51101	E-103000	GBK-4601-2	CBA-4002	MAB-4060	SS-4001	.....	IGB-4301A	.....	IG-4616
				CBA-4003	MAB-4074	SS-4001	E-143134	IGB-4301B	E-128077	.....
G Commercial	S-51101	E-103000	GAM-4503	CBA-4002	MAB-4060	SS-4001	.....	IGB-4301A	.....	IG-4311
TERRAPLANE 1935										
GU De Luxe 6	S-52101	E-103000	GBK-4602-1	TC-4304A	MAB-4060	SS-4001	.....	IGB-4301A	.....	IG-4616
					MAB-4074	SS-4001	S-5210966 & E-143134	IGB-4301B	E-128077	.....
TERRAPLANE 1936										
61 De Luxe	S-61101	E-157000	GAR-4702	CBA-4003	MAB-4075	SS-4001	.....	IGB-4301B	.....	IG-4633
TERRAPLANE 1936										
62 Custom	S-62101	E-157000	GAR-4701-6	TC-4304A	MAB-4075	SS-4001	.....	IGB-4301B	.....	IG-4633
TERRAPLANE 1937										
71	S-71101	E-250000	GCJ-4804A-1	CBA-4003	MAB-4075	SS-4001	.....	IGW-4012A	.....	IG-4644
TERRAPLANE 1937										
72	S-72101	E-250000	GCJ-4803A	VRD-4003A	MAB-4075	SS-4001	.....	IGW-4013A	.....	IG-4644
TERRAPLANE 1937										
70 (Commercial)	S-70101	E-250000	GCJ-4804A-1	CBA-4003	MAB-4075	SS-4001	.....	IGW-4012A	.....	IG-4644

NOTE: "S-" preceding a serial number indicates car serial; "E-" preceding a serial number indicates engine serial.

Where no serial number is given, unit is used from beginning of production serial and engine numbers—columns two and three.

GAR-4701-6 GENERATOR SPECIFICATIONS

ROTATION.....C.W.D.E.
VOLTS.....6.
CONTROL.....3rd Brush and Regulator.
FUSE.....5 Ampere in Regulator.
BRUSH SPRING TENSION.....Minimum 18 to Maximum 22 ounces.
BEARINGS.....C.E. Plain—Clearance .001" to .0025"
D.E. Ball.
LUBRICATION.....See text.

	Volts	Amps. (Cold) Max.	Min.
FIELD CURRENT DRAW	6.0	3.89	3.51
	7.2	4.73	4.27
	7.6	5.04	4.56
MOTORIZING DRAW	6.0	5.88	5.32
	7.2	6.62	5.98
	7.6	6.83	6.17
MAXIMUM OUTPUT	6.0	17.3	15.3
	7.0	19.8	17.8
	8.0	22.5	20.5

GAR-4702 GENERATOR SPECIFICATIONS

ROTATION.....C.W.D.E.
VOLTS.....6.
CONTROL.....3rd Brush and Regulator.*
FUSE.....None or 5 ampere in regulator.
BRUSH SPRING TENSION.....Minimum 18 to Maximum 22 ounces.
BEARINGS.....C.E. Plain—Clearance .001" to .0025"
D.E. Ball.
LUBRICATION.....See text.

	Volts	Amps. (Cold) Max.	Min.
FIELD CURRENT DRAW	6.0	4.10	3.70
	7.2	4.94	4.46
	7.6	5.25	4.75
MOTORIZING DRAW	6.0	5.04	4.56
	7.2	5.78	5.22
	7.6	6.04	5.46
MAXIMUM OUTPUT	6.0	12.8	10.8
	7.4	15.7	13.7
	8.0	17.0	15.0

*This generator can be used either with or without a regulator. When a regulator is used it should be mounted on the dash and grounded.

GBK-4601-2 GENERATOR SPECIFICATIONS

ROTATION.....C.W.D.E.
VOLTS.....6.
CONTROL.....3rd Brush and Regulator.*
FUSE.....None or 5 ampere in regulator.
BRUSH SPRING TENSION.....Minimum 18 to Maximum 22 ounces.
BEARINGS.....C.E. Plain—Clearance .001" to .0025"
D.E. Ball.
LUBRICATION.....See text.

	Volts	Amps. (Cold) Max.	Min.
FIELD CURRENT DRAW	6.0	4.52	4.08
	7.2	5.46	4.94
	7.6	5.78	5.22
MOTORIZING DRAW	6.0	4.62	4.18
	7.2	5.25	4.75
	7.6	5.57	5.03
MAXIMUM OUTPUT	6.0	12.3	10.3
	7.4	15.6	13.6
	8.0	17.5	15.5

GBK-4602 GENERATOR SPECIFICATIONS

ROTATION.....C.W.D.E.
VOLTS.....6.
CONTROL.....3rd Brush.
FUSE.....5 Ampere.
BRUSH SPRING TENSION.....Minimum 18 to Maximum 22 ounces.
BEARINGS.....C.E. Plain—Clearance .001" to .0025"
D.E. Ball.
LUBRICATION.....See text.

	Volts	Amps. (Cold) Max.	Min.
FIELD CURRENT DRAW	6.0	4.36	3.94
	7.2	5.20	4.70
	7.6	5.46	4.94
MOTORIZING DRAW	6.0	5.04	4.56
	7.2	5.78	5.22
	7.6	6.09	5.51
MAXIMUM OUTPUT	6.0	15.2	13.2
	7.4	18.9	16.9
	8.0	21.0	19.0

GBK-4602-1 GENERATOR SPECIFICATIONS

ROTATION.....C.W.D.E.
VOLTS.....6.
CONTROL.....3rd Brush.
FUSE.....5 Ampere.
BRUSH SPRING TENSION..... Minimum 18 to Maximum 22 ounces.
BEARINGS.....C.E. Plain—Clearance .001" to .0025"
D.E. Ball.
LUBRICATION.....See text.

		Amps. (Cold)	
FIELD CURRENT DRAW.....	Volts	Max.	Min.
	6.0	4.36	3.94
	7.2	5.20	4.70
	7.6	5.46	4.94
MOTORIZING DRAW.....	Volts	Max.	Min.
	6.0	5.04	4.56
	7.2	5.78	5.22
	7.6	6.09	5.51
MAXIMUM OUTPUT.....	Volts	Max.	Min.
	6.0	16.6	14.6
	7.4	20.6	18.6
	8.0	23.0	21.0

GCJ-4803A GENERATOR SPECIFICATIONS

ROTATION.....C.W.D.E.
VOLTS.....6.
CONTROL.....3rd Brush and Voltage Regulator.
FUSE.....None.
BRUSH SPRING TENSION..... Minimum 27 to Maximum 53 ounces.
BEARINGS.....C.E. Plain—Clearance .001" to .0025"
D.E. Ball.
LUBRICATION.....See text.

		Amps. (Cold)	
FIELD CURRENT DRAW.....	Volts	Max.	Min.
	6.0	2.1	1.9
	7.2	2.45	2.25
	7.6	2.6	2.4
MOTORIZING DRAW.....	Volts	Max.	Min.
	6.0	4.4	4.0
	7.2	4.7	4.3
	7.6	4.8	4.4
MAXIMUM OUTPUT.....	Volts	Max.	Min.
	6.0	20.1	17.7
	7.0	23.1	20.9
	8.0	26.0	24.0

GCJ-4804A-1 GENERATOR SPECIFICATIONS

ROTATION.....C.W.D.E.
VOLTS.....6.
CONTROL.....3rd Brush.
FUSE.....None.
BRUSH SPRING TENSION..... Minimum 27 to Maximum 53 ounces.
BEARINGS.....C.E. Plain—Clearance .001" to .0025"
D.E. Ball.
LUBRICATION.....See text.

		Amps. (Cold)	
FIELD CURRENT DRAW.....	Volts	Max.	Min.
	6.0	2.1	1.9
	7.2	2.45	2.25
	7.6	2.6	2.4
MOTORIZING DRAW.....	Volts	Max.	Min.
	6.0	4.4	4.0
	7.2	4.7	4.3
	7.6	4.8	4.4
MAXIMUM OUTPUT.....	Volts	Max.	Min.
	6.0	12.5	11.4
	7.0	14.6	13.2
	8.0	17.0	15.0

MAB-4060—MAB-4061—MAB-4074—MAB-4075 STARTING MOTOR SPECIFICATIONS

ROTATION.....C.W.D.E.
VOLTS.....6.
BRUSH SPRING TENSION..... Minimum 42 to Maximum 53 ounces.
BEARINGS.....2 plain.
END PLAY.....$\frac{1}{16}$" maximum.
LUBRICATION.....See text.
TESTS.....Without load and with Bendix.

Amps.	Volts	R.P.M.
60	5.5	3700

With load.

Amps.	Volts	Load Foot Pounds	R.P.M.
100	5.5	0.6	1910
300	4.5	6.6	695
400	4.0	10.15	420

Stall torque without switch.

Amps.	Volts	Load Foot Pounds
582	3.	15.8
775	4.	22.5

Stall torque with switch.

Amps.	Volts	Load Foot Pounds
575	3.	15.2
750	4.	21.5

IGP-4001A-B DISTRIBUTOR SPECIFICATIONS

ROTATION.....R.H.

CYLINDERS.....8.

CONTROL.....Automatic.

TIMING.....Adjustable thru range of 360° by loosening hold down arm clamp screw.

END PLAY.....In the drive shaft after coupling is pinned .003" to .010".

SIDE PLAY.....In bearings .005". New bearings fitted .0005" minimum to .001" maximum.

CONDENSER.....Located on breaker plate.

BREAKER POINT GAP.....

BREAKER POINT SPRING TENSION..

.017"—Check with wire feeler gauge.

18 to 20 ounces.

LUBRICATION.....See text.

ADVANCE.....IGP-4001A.

Distributor R.P.M.	Advance Max.	Advance Min.
400	2.0	0.0
535	5.0	1.0
672	8.0	4.0
810	11.0	7.0
945	14.0	10.0
1105	17.5	13.5
1265	21.0	17.0
1402	24.0	20.0
1540	27.0	23.0
1722	31.0	27.0
1860	34.0	30.0
2000	37.0	33.0

IGP-4001B.

Distributor R.P.M.	Advance Max.	Advance Min.
300	0.0	0.0
400	8.0	4.0
535	11.0	7.0
670	14.0	10.0
800	17.0	13.0
935	20.0	16.0
1070	23.0	19.0
1210	26.0	22.0
1345	29.0	25.0
1480	32.0	28.0
1615	35.0	31.0
1700	37.0	33.0
2000	37.0	33.0

IGP-4008A DISTRIBUTOR SPECIFICATIONS

ROTATION.....R.H.

CYLINDERS.....8.

CONTROL.....Automatic.

TIMING.....Adjustable thru range of 360° by loosening hold down arm clamp screw.

END PLAY.....In the drive shaft after coupling is pinned .003" to .010".

SIDE PLAY.....In bearings .005". New bearings fitted .0005" minimum to .001" maximum.

CONDENSER.....Located on breaker plate.

BREAKER POINT GAP.....

BREAKER POINT SPRING TENSION..

.017"—Check with wire feeler gauge.

18 to 20 ounces.

LUBRICATION.....See text.

ADVANCE.....IGP-4008A.

Distributor R.P.M.	Advance Max.	Advance Min.
300	0.0	0.0
400	8.0	4.0
535	11.0	7.0
670	14.0	10.0
800	17.0	13.0
935	20.0	16.0
1070	23.0	19.0
1210	26.0	22.0
1345	29.0	25.0
1480	32.0	28.0
1615	35.0	31.0
1700	37.0	33.0
2000	37.0	33.0

IGB-4301A-B DISTRIBUTOR SPECIFICATIONS

ROTATION.....R.H.

CYLINDERS.....6.

CONTROL.....Automatic.

TIMING.....Adjustable thru range of 360° by loosening hold down arm clamp screw.

END PLAY.....In the drive shaft after coupling is pinned .003" to .010".

SIDE PLAY.....In bearings .005". New bearings fitted .0005" minimum to .001" maximum.

CONDENSER.....Located on outside of housing.

BREAKER POINT GAP ..... .020"—Check with wire feeler gauge.
BREAKER POINT SPRING TENSION .. 16 to 20 ounces.
LUBRICATION ..... See text.
ADVANCE ..... IGB-4301A.

Distributor R.P.M.	Advance Max.	Advance Min.
400	2.0	0.0
560	5.0	1.0
720	8.0	4.0
880	11.0	7.0
1040	14.0	10.0
1200	17.0	13.0
1360	20.0	16.0
1520	23.0	19.0
1680	26.0	22.0
1840	29.0	25.0
2000	32.0	28.0

IGB-4301B.

Distributor R.P.M.	Advance Max.	Advance Min.
300	0.0	0.0
400	8.0	3.0
560	11.0	7.0
720	14.0	10.0
880	17.0	13.0
1040	20.0	16.0
1200	23.0	19.0
1360	26.0	22.0
1520	29.0	25.0
1630	31.0	27.0
2000	31.0	27.0

IGW-4012A DISTRIBUTOR SPECIFICATIONS

ROTATION ..... R.H.
CYLINDERS ..... 6.
CONTROL ..... Automatic.
TIMING ..... Adjustable thru range of 360° by loosening hold down arm clamp screw.
END PLAY ..... In the drive shaft after coupling is pinned .003" to .010".
SIDE PLAY ..... In bearings .005". New bearings fitted .0005" minimum to .001" maximum.
CONDENSER ..... Located on outside of housing.
BREAKER POINT GAP ..... .020"—Check with wire feeler gauge.
BREAKER POINT SPRING TENSION .. 16 to 20 ounces.
LUBRICATION ..... See text.
ADVANCE ..... IGW-4012A.

Distributor R.P.M.	Advance Max.	Advance Min.
300	0.0	0.0
400	8.0	3.0
560	11.0	7.0
720	14.0	10.0
880	17.0	13.0
1040	20.0	16.0
1200	23.0	19.0
1360	26.0	22.0
1520	29.0	25.0
1630	31.0	27.0
2000	31.0	27.0

IGW-4013A DISTRIBUTOR SPECIFICATIONS

ROTATION ..... R.H.
CYLINDERS ..... 6.
CONTROL ..... Automatic.
TIMING ..... Adjustable thru range of 360° by loosening hold down arm clamp screw.
END PLAY ..... In the drive shaft after coupling is pinned .003" to .010".
SIDE PLAY ..... In bearings .005". New bearings fitted .0005" minimum to .001" maximum.
CONDENSER ..... Located on outside of housing.
BREAKER POINT GAP ..... .020"—Check with wire feeler gauge.
BREAKER POINT SPRING TENSION .. 16 to 20 ounces.
LUBRICATION ..... See text.
ADVANCE ..... IGW-4013A.

Distributor R.P.M.	Advance Max.	Advance Min.
300	0.0	0.0
400	8.0	3.0
560	11.0	7.0
720	14.0	10.0
880	17.0	13.0
1040	20.0	16.0
1200	23.0	19.0
1360	26.0	22.0
1520	29.0	25.0
1630	31.0	27.0
2000	31.0	27.0