Majestic

AUTO-RADIO INSTALLATION MANUAL

▼

A COMPLETE EXPLANATION OF **THE PROPER METHODS OF INSTALLATION, TOGETHER WITH INFORMATION PERTAINING TO MOTOR INTERFERENCE AND THE METHODS OF SUPPRESSING IT**

ISSUED BY RADIO SERVICE DIVISION

GRIGSBY-GRUNOW CO.

5801 DICKENS AVE. • CHICAGO

PREFACE

IN AN EFFORT to acquaint auto radio installation men with certain fundamental facts regarding the installation of MAJESTIC Auto Radios, the Grigsby-Grunow Company has issued this booklet.

Realizing the importance of a good installation, as it affects the dealers' sales and satisfaction of the purchaser, we have tried to secure as much of this installation information as possible. The information presented herewith is of tremendous importance and we request that these pages be carefully read so that the proper sort of an installation will be made.

As you go through this booklet, you will note that we not only give you technical information on the receiver itself, but we give you information pertaining to the source of motor interference, the methods of suppressing it, and the correct manner and position of installing the receiver. We also present a detailed list of approximately 56 cars of different makes. The information pertaining to the installation of MAJESTIC Auto Radios in various cars has been gathered by a factory controlled, installation station.

We trust that you will realize the importance of the information contained herein and that you will at all times exercise good judgment and care in installing the MAJESTIC Auto Radios.

There is a possibility from time to time that you will encounter installation problems that are out of the ordinary and that we have not covered in this booklet. We would greatly appreciate the information regarding these problems if you will forward same to the Service Department of the Grigsby-Grunow Company.

Part No. 9507 Printed in U. S. A.

TECHNICAL DESCRIPTION OF MODEL -66- MAJESTIC AUTO RADIO

The MAJESTIC Model 66 automobile receiver is designed along the "all-in-one" lines pioneered by MAJESTIC. The entire set is housed in a rectangular can for easy mounting on two brackets to the fire-wall of the car. Flexible torsion cables allow the on-and-off switch, volume control and station selector to be transferred from the receiver proper to the airplane type control head mounted on the steering column.

The control head used on the Model 66 is unique in appearance and differs radically from earlier designs of this type. Due to the use of torsional mechanical control, it is unnecessary to use a complicated cable in connecting the control head and receiver, for with the exception of the pilot light wire, there is no electrical connection between the receiver and the head.

The power supply system used in this receiver is unique in several respects. The MAJESTIC Duro-Mute vibrator has been redeveloped and enlarged to handle adequately the power demands of the receiver. The vibrator head, though smaller in overall physical size, has a far greater electrical capacity than heretofore, the diameter of the circuit-breaking contact points being materially increased.

On earlier receivers using interrupter "B" supplies, it has been necessary to protect the vibrator during the starting period when arcing is prevalent by the use of spark gaps, relays, or other trick devices of this nature. There are definite disadvantages to all of these methods. The power supply system used in the Model 66 overcomes this difficulty in a unique fashion. A special resistance unit is shunted across the secondary of the output transformer. This has the property of changing its resistance as the applied voltage across it is varied. At an applied voltage of approximately 500 volts, the resistance is approximately 500,000 ohms, while at 2500 volts, the resistance decreases to about 2500 ohms. In this manner the exceedingly high peak voltages which occur during the starting period of operation are effectively reduced, since at these voltages the unit is low in resistance. After the receiver is in an operating condition and drawing its normal load, the peak voltages are low and the unit presents a very high resistance to the flow of current through it.

One of the most difficult problems encountered in the design of such a compact receiver is the problem of the elimination of interference between the power supply mechanism and the radio set itself. The vibrator type eliminator looked at from a radio frequency point of view is essentially a radio spark transmitter, and the problem of placing such a transmitter within a few inches of the antenna end of a very sensitive radio set without coupling between them, is one difficult of solution. The Model 66 receiver has been designed in such a way as to eliminate completely such interference. The vibrator head and transformer are enclosed in two rectangular cans with a one-quarter inch thick sponge rubber between them. These cans serve as a double electrical shield and the rubber insulation serves to dampen the mechanical "buzz" to a negligible level. All parts and circuits associated with the eliminator are completely shielded from the radio set proper, by the use of partitions and covers.

The tubes used in the Model 66 represent the latest advance in the art. The G-6E7 used as radio frequency and I.F. amplifiers, is a screen grid tube of characteristics somewhat similar to the type 58 used in home receivers. It is spray shielded and the spray is connected by itself to one of the prongs of the base. This allows the shield to be directly connected to ground rather than to the cathode as heretofore. This is a definite advantage since when the spray is connected to the cathode it must be carefully insulated from the chassis pan in most cases, due to the fact that the cathode is not operated at ground potential.

The G-6A7S used in the composite detector-oscillator position is the new Pentagrid con-

verter recently developed. This tube presents definite advantages over tubes previously used in this service, in that the automatic volume control may be allowed to operate on it, thereby allowing a far better degree of control than heretofore.

The **G-6C7** is a double diode triode similar to the 55 and 75 types but having an amplification factor intermediate between them. It has the advantage over the 55 of having considerably more gain and has none of the power handling deficiencies of the 75.

The **G-6Y5** rectifier tube is a full wave spray shielded mercury rectifier. Its use materially cuts down the amount of high frequency interference between the eliminator and the receiver.

The **G-89** is the familiar output tube used in earlier automobile receivers.

The circuit is largely conventional and has some unique features. It is a superheterodyne using an intermediate frequency of 175 kc. It is very selective, and free from images and tweets, since it uses a 3-gang condenser. The circuit sequence is as follows: One stage tuned radio frequency amplification, composite detector oscillator, one stage intermediate frequency amplification, diode detector, one stage of low level audio amplification followed by the power output stage. Full automatic volume control on three tubes is obtained resulting in an excellent characteristic with respect to input signal voltage.

The audio detector and A. V. C. are obtained from the diode circuit by the "delayed rectification method." In this method the diode plates operate at somewhat negative bias so that no A. V. C. results until a certain signal level has been reached. This results in much higher outputs at low signal levels that in the ordinary methods of the A. V. C. since the set is left in its most sensitive condition until reasonable power output has been obtained, whereas in the old methods of A. V. C. any signal at all starts to decrease the sensitivity of the set.

A 6″ full dynamic speaker, having exceptionally good response over the entire audio range, is used. The speaker is adequate in size to handle with excellent fidelity, all normal output levels necessary for automobile receivers. The receiver is equipped with twin jacks for connection of an external magnetic type speaker, to be operated at the same time as the regular speaker on the set. The use of the extension speaker has practically no effect upon the volume output of the regular dynamic speaker in conjunction with which it is working.

FIGURE 180		
DATE	ISSUE	MEMO
5-5-33	1	7881
5-12-33	2	7900
5-19-33	3	7933
5-25-33	4	7953
5-27-33	5	7958
6-8-33	6	8000
6-20-33	7	8019

SCHEMATIC DIAGRAM OF MAJESTIC MODEL 66 AUTOMOBILE RECEIVER.

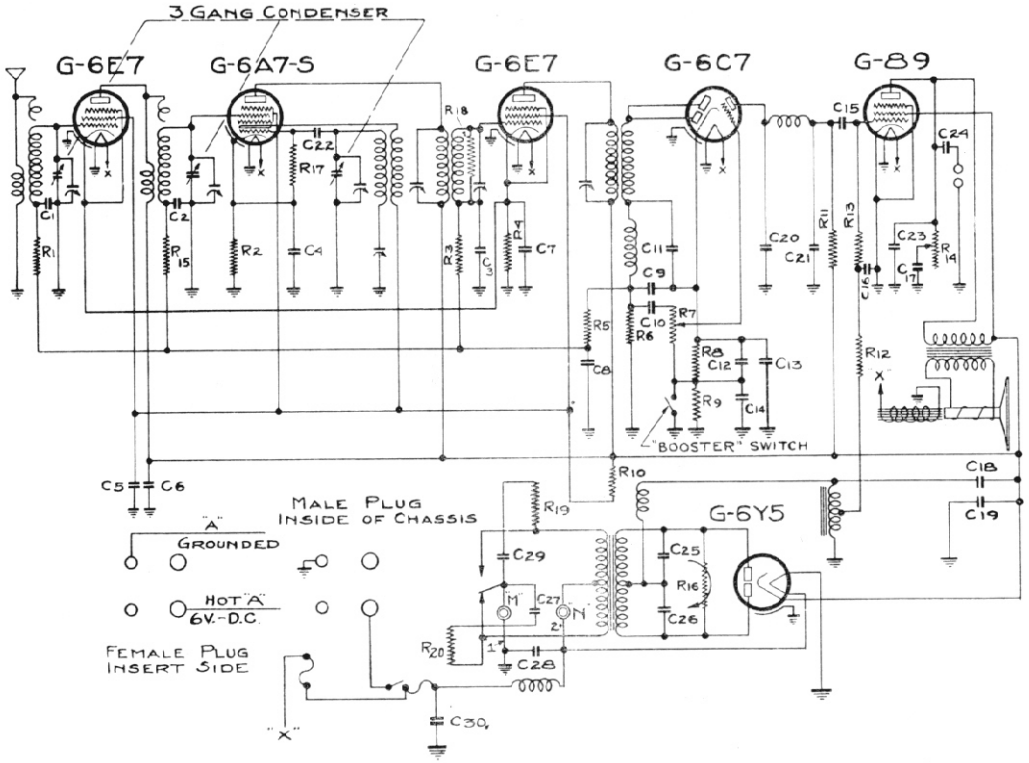

RESISTORS

R1—300,000	R10—10,000
R2—400	R11—200000
R3—300,000	R12—250000
R4—120	R13—250000
R5—300,000	R14—50,000
R6—100,000	R15—300,000
R7—200,000	R16—500,000 GLOBAR
R8—2,500	R17—50,000
R9—10,000	R18—500,000
R20—69	R19—69

CONDENSERS

C1—.03	C16—.25
C2—.03	C17—.02
C3—.01	C18—8.0
C4—.1	C19—8.0
C5—.25	C20—.0005
C6—.25	C21—.0005
C7—.25	C22—.00025
C8—.03	C23—.005
C9—.0005	C24—.1
C10—.03	C25—.008
C11—.0005	C26—.008
C12—10.	C27—.1
C13—.25	C28—.5
C14—.25	C29—.1
C15—.03	C30—.5

NOTE

WHEN A+ IS GROUNDED VIBRATOR LEAD #1 (BLUE) SHOULD CONNECT TO TERMINAL "M" (VIBRATOR ARMATURE) AND LEAD #2 (BLACK) SHOULD CONNECT TO TRANS. PRIMARY CENTER TAP (TERMINAL "N") WHEN A- IS GROUNDED REVERSE ABOVE CONNECTIONS.

GRIGSBY-GRUNOW CO.
CHGO, ILL.

5-5-33 L.J. WRONKE

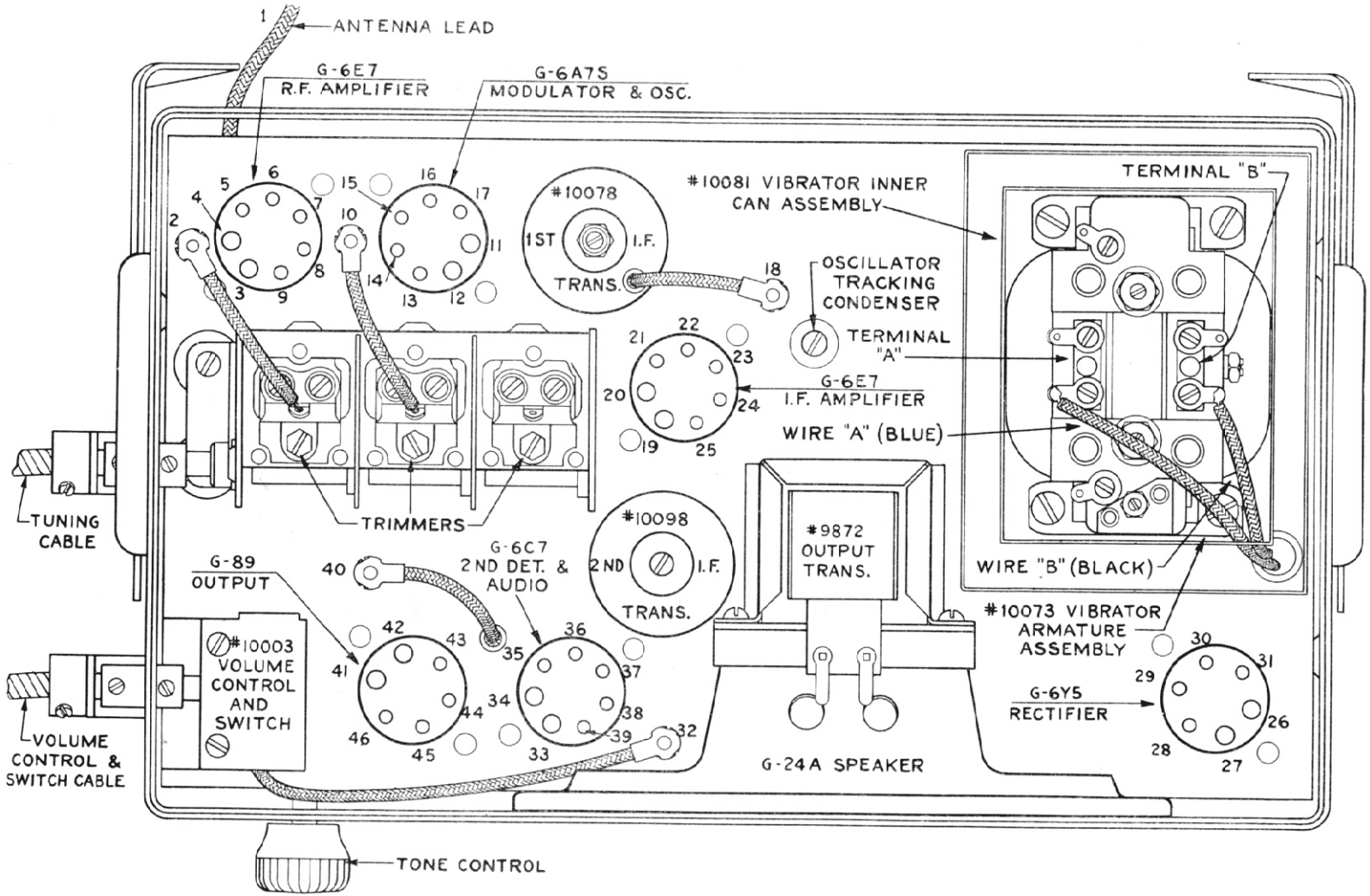
ANTENNA LEAD
G-6E7
R.F. AMPLIFIER
G-6A7S
MODULATOR & OSC.
#10078
1ST
I.F.
TRANS.
#10081 VIBRATOR INNER
CAN ASSEMBLY
TERMINAL "B"
OSCILLATOR
TRACKING
CONDENSER
TERMINAL
"A"
G-6E7
I.F. AMPLIFIER
WIRE "A" (BLUE)
TRIMMERS
TUNING
CABLE
#10098
2ND
I.F.
TRANS.
#9872
OUTPUT
TRANS.
WIRE "B" (BLACK)
G-89
OUTPUT
G-6C7
2ND DET. &
AUDIO
#10003
VOLUME
CONTROL
AND
SWITCH
#10073 VIBRATOR
ARMATURE
ASSEMBLY
G-6Y5
RECTIFIER
VOLUME
CONTROL &
SWITCH CABLE
G-24A SPEAKER
TONE CONTROL

TO
MC

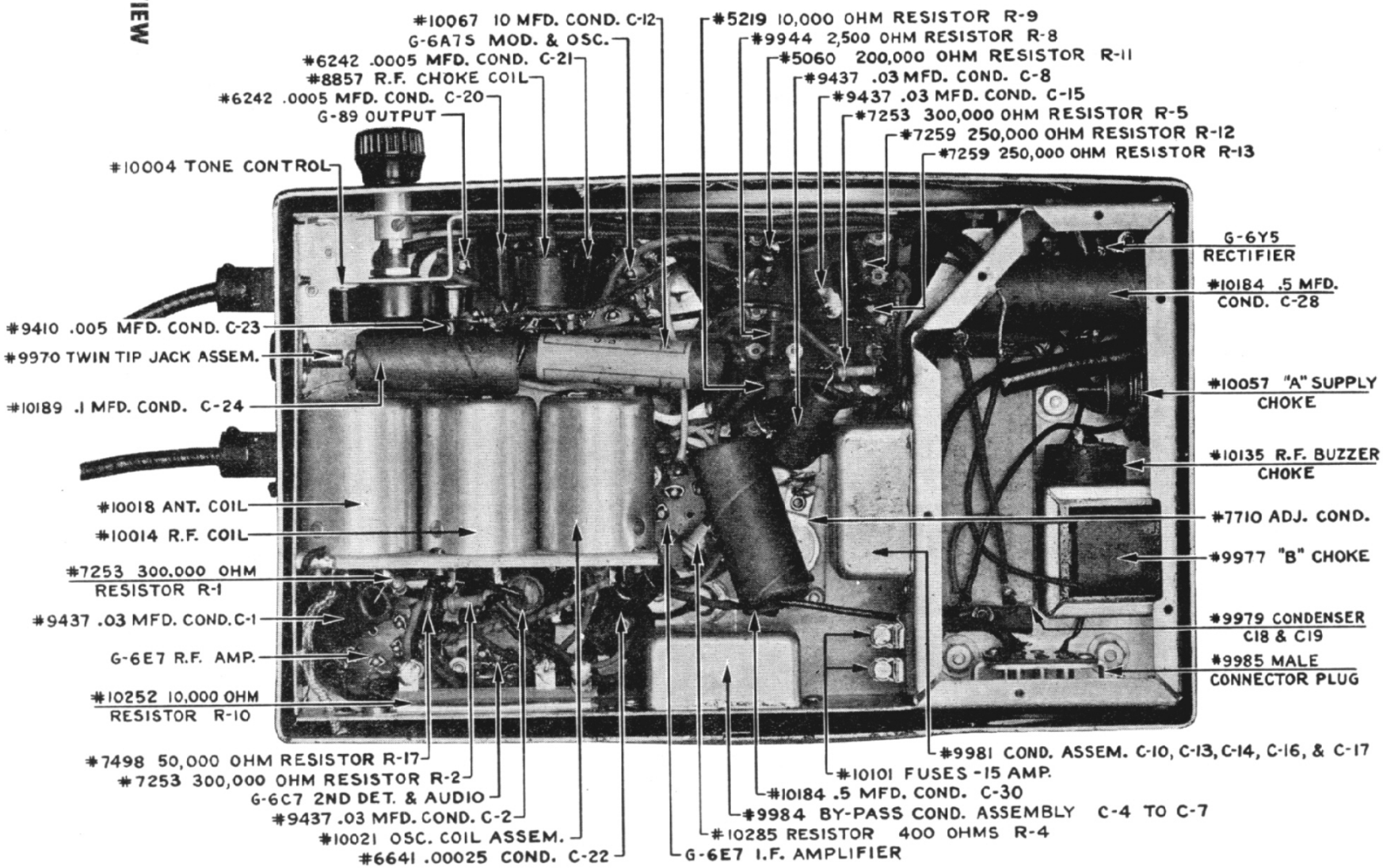

BOTTOM VIEW
MODEL 66 RECEIVER

VOLTAGE TABLE FOR MODEL 66 AUTO RECEIVER

	Plate Volts			Screen Volts			Cathode volts			Grid Volts		
Battery Terminal Volts	5.5	6.3	7.5	5.5	6.3	7.5	5.5	6.3	7.5	5.5	6.3	7.5
R. F. (G-6E7)	182	217	256	88	99	109	8.0	9.3	12.5	8.0	9.3	12.5
G-6A7S Det.	182	217	256	88	99	109	2.7	3.4	4.2	2.7	3.4	4.2
G-6A7S Osc.	88	99	109	.....	.....	.....	.....	.....	.....	7.0*	8.0*	8.0*
I. F. (G-6E7)	182	217	256	88	99	109	8.0	9.3	12.5	8.0	9.3	12.5
Audio (G-6C7)	51	60	61	.....	.....	.....	7.5	9.2	9.5	1.8	2.2	2.3
Output (G-89)	177	209	248	184	218	257	.....	.....	.....	23.0	27.0	35.0

Battery Terminal Volts.....	5.5	6.3	7.5
B+ to B— (Volts).....	216	261	322
B+ to Ground (Volts).....	184	218	257
Total Battery Drain (Amps).	6.15	7.25	8.50

*Measured with 300,000 ohm meter.

All voltages measured with no input signal.

All voltages to ground from socket unless otherwise stated.

ALIGNMENT PROCEDURE

1. Receiver should be aligned with all tubes in place and a tube shield on each tube except the 89 and the 6Y5.

2. Receiver should be aligned with volume control in maximum volume position.

3. Supply 175 kilocycle signal to the grid of the first detector tube and align with three intermediate frequency tuning condensers for maximum sensitivity.

4. Supply 1500 kilocycle signal to the input of the receiver. After tuning the set to this frequency, align the gang condenser trimmers for maximum sensitivity.

1. BOOSTER SWITCH

2. MOUNTING OF RECEIVER

3. CONNECTING CONTROL

1. Booster Switch

On Model 66 receivers a switch is located above the tone control. For normal reception this switch should be turned towards the left of the receiver where ample sensitivity for ordinary reception, quietest performance, maximum power and best tone will be secured.

To bring in distant or low-powered stations the switch should be turned to the right. An apparent increase in sensitivity will be noted.

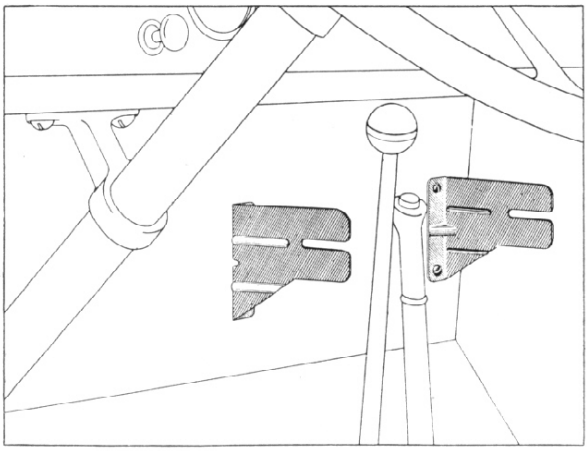

Fig. No. 1

2. Mounting Receiver

The receiver is designed to be installed on the inside of the fire-wall behind the instrument panel, preferably in a horizontal position and close enough to the steering column for the control cables to reach the receiver. Only in cases where it is impossible to install in a horizontal position should it be mounted vertically. Mount the two adjustable brackets, one on each end of the receiver, then determine the best location for the receiver by holding it against the fire-wall, being careful to avoid interference with mechanical controls of the car. It may be necessary to reverse the brackets to accomplish this. After the best location has been determined, drill four holes using the template furnished with receiver for marking their location. Figure No. 1 shows how the brackets should look after being bolted to the fire-wall. Before permanently bolting the receiver to the brackets, the plug of the battery cable should be inserted into the rear of the receiver.

CAUTION—All mounting nuts and bolts must be drawn tight.

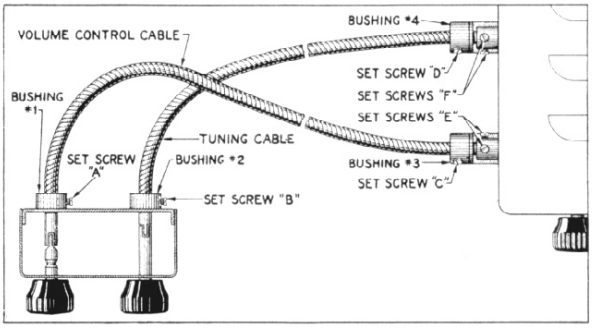

Fig. No. 2

3. Connecting Control

Two flexible drive shafts are furnished with the Model 66 receiver. The volume control shaft has a slotted fitting on one end while the tuning shaft is similarly provided with a key fitting. To assemble the control unit the end of the volume control shaft with the slotted fitting should be inserted into bushing No. 1 on the control unit. (See Fig. No. 2.) Make sure the outside casing of the shaft goes about five-sixteenths of an inch into the bushing. Then tighten the set screw "A" so that the outer casing of the cable will be securely held. Now connect in the same manner, the key end of the tuning cable to bushing No. 2, securing it with set screw "B." After the two cables are so connected, be sure that the knobs on the control head turn smoothly and without binding. Binding might be caused by the cables being pushed too tightly into the control unit.

The left hand or volume control cable should now be connected to bushing No. 3 on the end of the receiver. Pass the cable through the bushing so that the fitting on the end of the cable fits into the coupling on the volume control

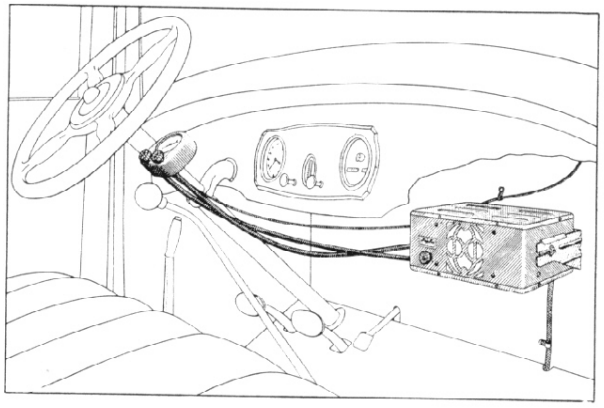

Fig. No. 3

and the outer casing of the cable comes flush with the inside edge of bushing No. 3. Tighten set screw "C" so that it will securely hold the outer casing.

Next, connect in the same manner, the tuning cable to bushing No. 4, securing it with set screw "D." If the cables are properly connected they will cross. **Set screws "E" and "F" should not be tightened until the control unit and cables are permanently mounted.**

Now mount the control unit on the steering column in the most convenient place. Fasten drive cables securely wherever convenient so that they will not interfere with operation of the car, and then tighten the set screws "E" and "F" in the couplings. If these are tightened before the control unit has been mounted, binding of the controls might result. Binding might also be caused by the bushings on the end of the receiver not being directly in front of the couplings. By loosening the screws that hold the bushings and then re-adjusting the bushings, this condition should be remedied. After control unit and receiver are mounted, they should appear as in Fig. No. 3.

After the control unit and cables have been connected, the dial pointer should be adjusted. This is accomplished by slowly rotating the tuning control knob to the right until a definite stop is reached. Do not force the knob after the stop has been encountered as this may seriously damage the mechanism. Then rotate the knob slowly to the left until another definite stop is reached. In most cases it will be natural for either the pointer to come to the end of the dial strip before the stop is reached, or for the stop to be reached before the pointer comes to the end of the dial strip. In this manner the dial pointer is automatically adjusted to indicate correct frequency readings.

4. BATTERY CONNECTION

5. IMPORTANT

4. Battery Connection

The shielded battery cable should now be connected directly to the car storage battery terminals, running the cable via the shortest possible route—preferably along the channel of the car chassis. In practically all cars, the terminals of the battery are badly corroded. Scrape the terminals clean so that all corrosion is removed before making the battery cable connections. Keep this cable out of the motor compartment and away from all high tension leads. Use the clamps furnished with receiver for grounding the shielding at as many points as possible. Also attempt to keep battery cable away from antenna lead-in.

5. Important

The shielding of this cable must always be connected to the ground side of the battery, and the wire emerging from the shielding, to the hot side. The polarity of the battery need not be considered when making these connections. However, the receiver as shipped, is connected for installation in a car having the positive terminal of the battery grounded. If the installation is made in a car which has the negative terminal of the battery grounded it will be necessary to reverse two wires in the vibrator assembly of the receiver.

To locate these wires, first remove the top of the receiver, and then the outer vibrator assembly cover which is at the right side of the receiver. This cover is held down by four nuts.

6. CONNECTING ANTENNA

7. INSTALLATION OF ROOF ANTENNA

Now remove the top piece of sponge rubber and the inner vibrator cover. The vibrator armature assembly will now be accessible. Connected to one side of the vibrator is a blue wire, and to the opposite side a black wire. These two wires should be reversed when the receiver is installed in a car in which the negative terminal of the battery is grounded.

For positive ground:
Wire "A" Connects to lug "A"
Wire "B" Connects to lug "B"

For negative ground:
Wire "A" Connects to lug "B"
Wire "B" Connects to lug "A"

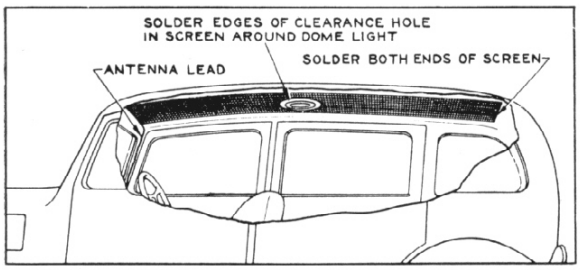

Fig. No. 4

6. Connecting Antenna

Some automobiles are factory equipped with a roof antenna. In this case, the antenna should be checked to be sure it is not grounded; however, if the car is not equipped with a roof antenna, it is recommended that, in cases where it is possible, this type of antenna be installed as shown in Fig. No. 4. If the roof antenna cannot be used the Majestic running board antenna, part No. 8585, which can be purchased through your Majestic distributor, is recommended and is mounted as shown in Fig. No. 5. The single

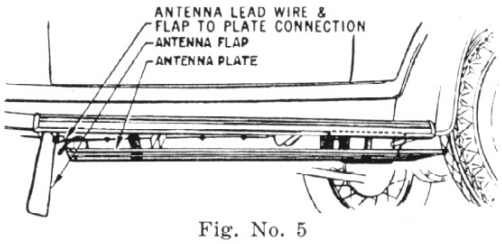

Fig. No. 5

conductor shielded lead on the left hand side of the receiver is the antenna lead. This should be connected directly to the lead of the antenna. **Keep lead-in out of motor compartment and away from all high tension leads and the radio set battery cable.** After the connection to the antenna has been soldered and taped, the shield of the lead-in and the antenna lead of the set should be brought together over the taped connection and soldered to each other. Low capacity shielded antenna wire should be used if it is necessary to lengthen the lead-in. When a roof antenna is used the shielding should extend two inches beyond point where antenna lead leaves car body.

7. Installation of Roof Antenna

For efficiency and best results for distance reception, a Roof Antenna should be used. There are four types of top construction commonly used by the automobile manufacturer. First, tops with slat construction: In these cars the headlining should be lowered, working from front to rear. This can be done by removing the moulding between the windshield and the top of the car which is usually held in place by two **or three screws. Then remove the moulding** on both sides that runs from the front of the car to the back of the rear door. When this is removed you will notice the headlining is tacked to the trim rail. Remove the tacks from this, and the headlining will drop down. When replacing this headlining if care is taken to put the tacks back in their original holes, and moulding put back in place, it will be hard to tell that it has been taken down. After the headlining is down, if the top is of slat construction, No. 18 rubber covered stranded wire may be strung back and forth between the slats, tacking it to the front of the top and to the last bow used. About 60 to 75 feet of wire is sufficient. Be sure to keep the wire at least four inches from the metal sides of the top which is called the

quarter deck. A lead-in should be fastened to one end of this wire and brought down through the corner post most convenient to the location of the receiver. It is also possible to use, instead of this stranded wire, copper screening. When this latter is used, care should be taken that the screen is kept at least three inches from any metal part of the car and the dome light. See Figure 4 which shows how this type of antenna should be installed. A stranded copper, rubber and cotton covered lead-in wire should then be soldered to the front corner nearest the receiver and then run down through the corner post. Be sure that the screen is tacked securely to the bows, being careful not to tack the screen to those bows to which the headlining strip is fastened.

Tops With Wire Construction—The headlining is removed by following the same procedure as above. The wire mesh may be used as an antenna by cutting out a three inch strip around the four sides. The center portion of the mesh is then laced securely to the part still remaining attached to the car by use of a strong cord. This should be pulled tight enough to hold the center portion of the mesh up and to prevent the top from sagging. A lead-in should be soldered to the corner of this mesh nearest the receiver and run down the corner post. The dome light wires may have to be rearranged so that there is a minimum of coupling between them and the antenna.

Fabric Top Construction—The same procedure can be followed as in the slat top construction with the exception that if you use a copper screen, it should be placed on top of the bows and tacked at both ends.

Cars With Metal Braces—Some cars have metal diagonal braces to strengthen the top and usually these braces are fastened in wood at the rear and in a metal frame at the front. It will be necessary that these braces be freed of grounds or the efficiency of the antenna will be greatly reduced. This can be done by removing the braces at the front and reaming the holes to allow the use of a fibre washer or sleeve bushing to insulate the cross brace bolts from the brackets. Usually one of the dome light wires is connected to one of the braces and this lead will have to be disconnected from the brace and a new lead run to the body of the car.

Roadster or Convertible Type Tops—A wire antenna is the only practical one for this type of roof. Remove the tacks from the front end of the top and lay the top back, exposing the bows and quarter deck pads. Use a No. 18 stranded rubber covered copper wire (about 75 feet) starting at one corner and tacking securely in place. Then sew the wire to the quarter deck fabric as far as you can go on the same side. Then return and repeat this operation until there are six or seven rows of wire sewn into the fabric about one inch apart. Then tack wire across top box to the other side and repeat operation. The stitches are really individual knots about five or six inches apart. The lead-in should be run down the back corner which is most convenient to receiver so as to permit the folding back of car top. Care should be exercised when replacing top to get tacks in the same holes.

The proper connection of the antenna to the receiver is very important and should be made with a low-capacity shielded single conductor wire. One end should be connected directly to the shielded single conductor lead on the left hand side of the receiver. After the electrical connection has been soldered and taped, the two shieldings should be telescoped (one run over the other) for about an inch or two and soldered together. Next, a large sized wire or piece of shielding should be soldered to the shielding of the antenna lead where it leaves the chassis and to the lug on the right rear side of the chassis container and then grounded to the firewall. All paint and rust should be scraped away before the ground is made and if a bolt is used it should be tightened as much as possible. The antenna lead should now be run to the antenna, keeping it out of the motor compartment and well away from any high tension leads or the coil, and connect it to the antenna, making sure of a good clean contact. If the running board antenna is used, the shielding should stop about 6″ from the plate of the antenna, and if a roof antenna is used, it is only necessary to shield the lead-in to a point about two inches beyond where the lead-in enters the door post or windshield post. If the lead-in to the roof antenna is not protected by some body post, the shielding should run to within 6″ of the antenna. If the shielding of the antenna lead is grounded in two or three places it may help greatly in obtaining reception free from motor noises.

8. OPERATING RECEIVER

9. EXTRA SPEAKER CONNECTIONS

10. FUSES

11. SPARK PLUG SUPPRESSORS

8. Operating Receiver

The receiver is now ready for operation and should be tested to see that all electrical connections have been properly made. The left hand knob on the control unit actuates the "On" and "Off" switch and volume control. The first fifteen degrees of this knob in a clockwise direction turns the receiver "On." Further rotation of this knob controls the volume of the receiver. The other knob on the control unit is the station selector. The knob on the lower left front corner of the receiver operates the tone control and should be adjusted according to the desire of the operator. The dial is calibrated in kilocycles so that the frequency to which the receiver is tuned may be read directly from the dial.

NOTICE—Best results from the receiver will be obtained if the car generator is set to charge at a higher rate, in order to keep the battery at full charge at all times. DO NOT, HOWEVER, SET IT TO CHARGE IN EXCESS OF 14 AMPERES.

9. Extra Speaker Connections

A terminal is provided under each of two plug buttons on the left end of the receiver for the connection of an extra speaker to the receiver. This speaker is of the magnetic type and is connected to the plate of the output tube.

10. Fuses

For protection to the receiver and car battery, the receiver is provided with two fifteen ampere fuses. These are located in the bottom of the receiver and if replacement is necessary, may be reached by removing the small plate in the bottom cover of the chassis container.

Every MAJESTIC Model 66 Auto Radio includes six (6) spark plug suppressors, Part No. 4640, one (1) distributor suppressor, Part No. 5122, and two (2) condensers, Part No. 8278. These accessories are to be used to prevent motor interference from being picked up by the radio receiver while the motor is running and they should be installed in the following manner.

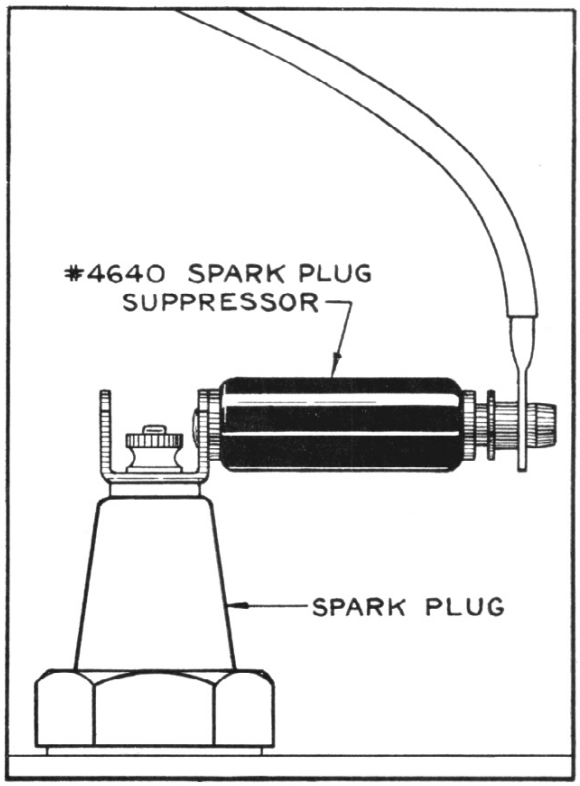

Fig. No. 6

11. Spark Plug Suppressors

Remove one at a time, the high tension lead from the top of each spark plug; mount in its place a spark plug suppressor. Connect the high tension lead to the terminal provided for it on end of the suppressor. Mount suppressor in horizontal position when possible. Figures No. 6 and No. 7 show the proper method of installing spark plug suppressors. On some cars, such as the Buick, Franklin and Nash, screw type suppressors, Part No. 5199, should be used. These are installed by cutting high tension leads about two inches from the plugs. Then screw one cut end of the wire into each end of the

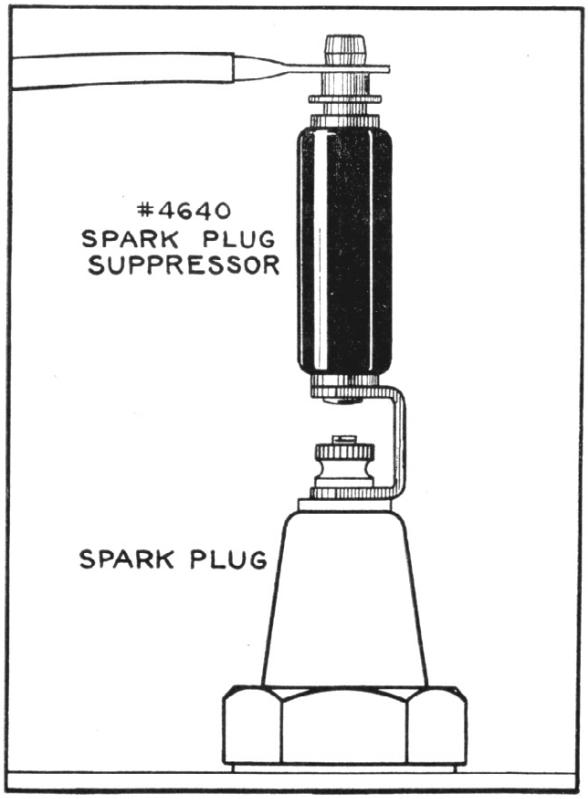

Fig. No. 7

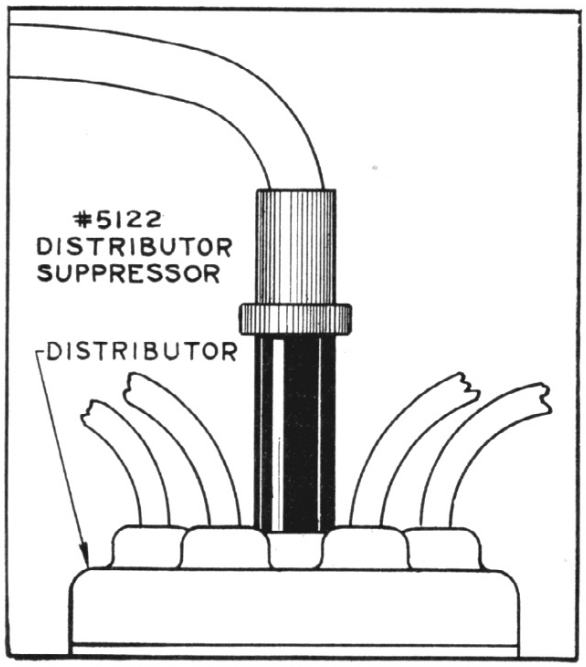

Fig. No. 8

12. DISTRIBUTOR SUPPRESSOR

suppressor. Be sure of a good contact. This type suppressor is shown installed in a lead in Figure No. 9.

12. Distributor Suppressor

Install the distributor suppressor in the center socket of distributor head, as shown in Figure No. 8, by removing the high tension lead which runs from the distributor head to the coil

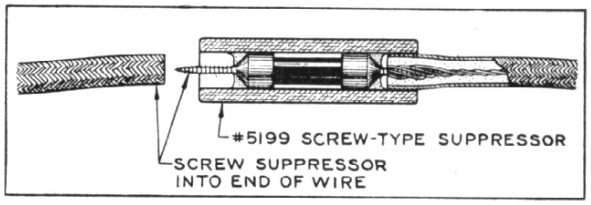

Fig. No. 9

and plugging the split end of the suppressor into the distributor head, making sure of a good contact. Insert the high tension lead in the other end of the suppressor. If the car has a cap type distributor, the suppressor may be plugged in

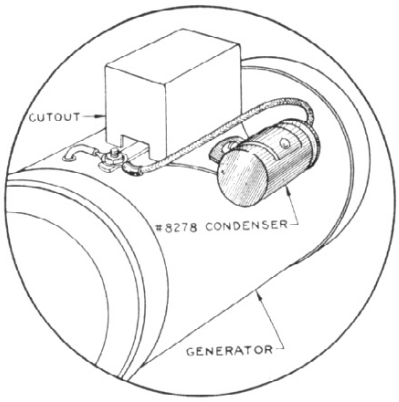

Fig. No. 10

13. GENERATOR CONDENSER

14. AMMETER CONDENSER

15. MOTOR IGNITION NOISE

16. BONDING OR GROUNDING
Material To Be Used and Method Of Application

the coil or the screw type suppressor may be used, see Figure No. 9. In cars having two coils, a suppressor in each high tension lead is necessary. Always install the suppressor as close to the distributor as possible.

13. Generator Condenser

Fasten the lead of one of the .5 microfarad condensers to the generator side of the cut-out relay on the car generator and clamp the condenser to the frame of the generator. The screw holding the cut-out may be used for this purpose. Be sure that the condenser is securely fastened and a good ground connection made. In most cars, this condenser can be installed and connected as illustrated in Figure No. 10.

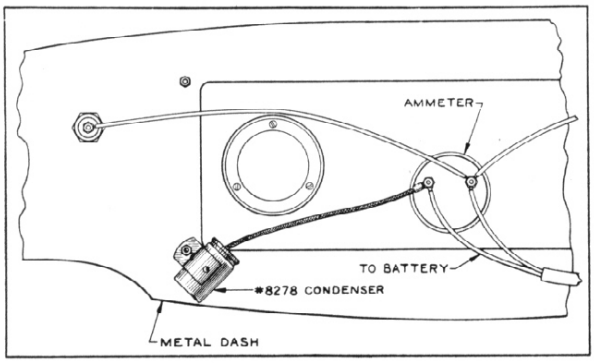

Fig. No. 11

14. Ammeter Condenser

Fasten the lead of the other .5 microfarad condenser to the storage battery side of the ammeter. This usually is the terminal that has only one wire connected to it. Secure condenser to instrument panel (if it is metal) or to some metal part, being sure of a good ground connection. A typical installation of this condenser is shown in Figure No. 11. Sometimes this condenser is more effective when attached to the dome light, stop light or horn wires. The latter is usually necessary when the car is equipped with a roof antenna. This may be tried while the motor is running and the effect on the interference noted, the condenser being connected to most effective point. It may be necessary in extreme cases to connect a condenser to more than one of these points in order to obtain reception free from interference.

In some cases, if after installing the suppressors and condensers as directed and motor noise still exists, shielding of the pilot light wire that runs from the receiver to the control head will very effectively suppress the disturbance.

The above procedure should effectively suppress motor interference in practically all installations. However, if this does not hold true, it may be necessary to apply one or more of the following methods before complete suppression is obtained.

15. Motor Ignition Noise

To get a true picture of motor noise, its cause, peculiarities, and how to eliminate it, we should first consider the ignition system as a small transmitter, transmitting radio frequency signals which are in turn picked up by the radio receiver antenna in the form of static.

There are two points from which the radio frequency current or noise is radiated, the spark plugs and the distributor. A field set-up by either or both of these is picked up directly by the antenna, or is carried by some rod or wire in this field to the antenna or through the car wiring to the storage battery and then into the radio receiver circuit. We identify this as either antenna pickup or chassis pickup.

To eliminate these noises, we first reduce this field of radiation by use of suppressors. These suppressors are a resistance usually 25,000 ohms and their function is to confine the R.F. caused by a spark to its particular plug, thereby reducing the field to a minimum. This field also can be reduced by enclosing the ignition wires in a metal case or shield. The Buick motor is an example of this. However, after these suppressors are installed, we often find we still have ignition noise. This may be caused by the

high tension wire leading from the coil to the distributor radiating to a wire or rod and in turn being carried to the receiver. If it is a rod, the cure is to bond or ground it to the nearest ground point. If it is a wire, it may have to be removed to a distance from the high tension wires, or it may have to be shielded and bonded. The ignition coil may have to be moved closer to the distributor in order to reduce the R.F. field. This noise may also be caused by an R.F. feed back through the primary circuit of the coil. This is usually reduced by use of by-pass condensers either on the coil, ammeter, switch, fuse block or other part of the primary circuit. Often the motor block, steering post and various metal parts and rods on the car have to be bonded together before the noise is finally eliminated. In locating these, use a heavy file and ground each possible carrier to either the firewall or motor block tightly until a reduction of noise is noticed, then place a short bond between these two points.

16. Bonding or Grounding

The surfaces to be bonded must first be scraped free of rust, paint and oil. A soldered bond is best where there is no strain placed on the bond. Use 3/8" or wider copper mesh (shielding) as bonds. A wire or narrow strap is not as effective as a wide mesh. Make all bonds as short as possible, but allow for movement between the pieces bonded. In making a soldered bond to an armored cable, for example, a choke rod — do not allow solder to sweat through the armor to the inner wire as it may become inoperative. Be careful in bonding a shielded wire such as the antenna lead-in, as too much heat will break down the insulation.

17. By-Pass Condensers

When a condenser is installed on the generator ammeter or other part of the car, be sure to clean the surface on which the condenser bracket is mounted thoroughly. Place the condenser as close to the part it is by-passing, as possible. A long condenser lead may defeat the purpose. Always fasten it tightly so that there is no chance of its working loose and possibly short circuiting a live connection. Do not install the condenser until you have tried it at various points such as ignition coil, fuse block, light switch, et cetera, and have found the point at which it will do the most good. Often an extra condenser is necessary in the same circuit. In some cases, a smaller capacity condenser is effective where a standard is not. Never install a condenser in the "Neg" side of coil as it usually interferes with the car ignition system.

17. BY-PASS CONDENSERS

18. SPARK PLUGS

19. SHIELDING OF HIGH AND LOW TENSION WIRES

18. Spark Plugs

On a car that has been in service for some time, it is well to reset the spark gap in the plugs and clean out all carbon deposits, both internally and externally. This, of course, will improve car operation as well as radio reception.

19. Shielding of High and Low Tension Wires

Where it is necessary to shield wiring either on the set or car, it is well to use a reasonable amount of care as a good deal of harm can be done by careless work.

Where shielded wires must be carried over the motor block or exhaust manifold, they should be spaced away from any hot surface they might contact, as the heat will break down the insulation. When grounding this shielding by soldering, hold the iron on the part to be soldered only long enough to make a good soldering point. Fasten the shielded wire securely to eliminate any danger of its moving around and short circuiting an open contact. Where the shielded "A" cable is too long, either fasten the excess cable securely or cut to fit. Often this cable is allowed to move freely and eventually is shorted across the battery terminals. It is good judgment to tape or otherwise insulate the shielded portion of this cable for a distance of eighteen inches from the battery as a safeguard.

Do not shield the high tension lead from the coil to distributor unless absolutely necessary, and then the shielding must be spaced from the high tension lead by loom to guard against loss of spark by leakage.

Ground all shielding at several points to frame of car or motor block.

20. METHOD OF LOCATING AND SUPPRESSING MOTOR INTERFERENCE

20. Method of Locating and Suppressing Motor Interference

First, determine whether the radiation is picked up by the antenna or by the receiver itself. This can be done by grounding the antenna lead as it leaves the receiver. If the motor interference stops, one may be sure that it is being picked up by the antenna. If it continues it is quite certain that part of the noise is being picked up by the receiver itself. If this is the case, make sure that all ground connections are clean and tight. If the instructions for installing the receiver have been carefully followed and all wires of the radio set have been kept out of the motor compartment, there should be no receiver pick-up. In the event of antenna pick-up of motor interference, the following suggestions are made to eliminate it. These suggestions should be followed in the order in which they are given and the motor started and tested for interference after each step.

It may be necessary to reduce the gap between the rotor arm and contacts of the distributor head. Extreme care should be used in this operation to prevent harming the distributor. Peen the rotor by placing it on a flat steel block and hammering the end with a small machinist's hammer. Repeat this operation until there is just sufficient clearance — about .004″. The rotor must not be allowed to touch the contacts. If there is evidence of the rotor touching the contacts, file off about .001″ and recheck. Building up the rotor arm with solder is not recommended as the solder is very soon burned away. In some cases, where the rotor is badly worn, it may be best to substitute a new one.

If the motor interference still continues, it may be well to determine the source. This can be done by removing the high tension lead from the coil to the distributor, turning on the ignition switch and cranking the car by hand. If a clicking is heard in the speaker, you may be sure that part of the trouble comes from the breaker points in the distributor or low tension circuit. It will then be necessary to remove the primary lead which runs from the coil to breaker points on the distributor, and replace it with a No. 14 shielded low tension cable, being sure not to run close to the high tension leads. The shielding must be grounded in at least two places. All ground connections must be as short as possible. It may be necessary to remove the lead from the switch to the coil and replace with a No. 14 shielded low tension cable being sure to ground the shielding. Care must be used when shielding so as not to short the coil or switch. Never use a by-pass condenser on this part of the circuit because it will affect the operation of the motor.

When you have tested to determine the source of motor interference and no clicking was heard in the speaker, we may assume that the interference is coming from the high tension or secondary circuit which is possibly the worst source of motor interference. All wires which run parallel to or within the field of this part of the circuit act as carriers and should be moved whenever possible, or the high tension wire re-routed. Sometimes the car manufacturer utilizes the high tension manifold to hold various wires and just removing them from the manifold will be sufficient. Be careful to keep the high tension lead as far as possible from the receiver. If after moving the wires, the interference continues, the high tension lead should be shielded. Care should be used when shielding the high tension lead to prevent the current from leaking through to ground. To prevent this first cover the high tension lead with loom, then run this shielding over the loom. The shielding must be grounded in at least two places (to the coil and motor block or high tension manifold). When the coil is under the cowl or bulkhead, the high tension lead should run as direct as possible to the motor

compartment. This will sometimes necessitate drilling a new hole about one-half inch in diameter in the firewall or dash.

Due to the electro-magnetic field surrounding the ignition coil, it may be necessary, when the coil is under the cowl or bulkhead, to move it into the motor compartment. Mount it on the motor block as close to the distributor as possible and be sure that a good ground connection is maintained. If it is found necessary to mount the coil over the motor, care should be taken that it is so mounted as to stay sufficiently cool. New primary wires will be required and shielded No. 14 low tension ignition cable should be used. Caution! Do not run these wires close to the high tension lead, but ground them well. **Only move this coil as a last resort.**

In a number of cases, the establishing of a good electrical contact between the motor block, firewall and frame of the car will eliminate much of the interference. In assembling automobiles, oftentimes paint or other substances will prevent a good ground connection from being made between the various metal parts of the car which form the ground circuit. These poor connections will have no apparent effect on the operation of the car. However, when a radio receiver is installed, it is especially desirable to maintain all the metal parts of the car at the same ground potential. This is accomplished by connecting together with short pieces of shielding the motor block, frame, and firewall and sometimes the body of the car. Bonding may be particularly necessary on those cars having the motor mounted on rubber blocks. When bonding the motor to the firewall, use one-inch shielding and make the bond long enough to allow for vibration of the motor.

Each and every wire, rod or pipe that runs from the motor compartment through the firewall into the body of the car acts as an antenna to radiate interference and should not be overlooked. To stop them from radiating, solder a heavy flexible copper conductor to them close to the firewall, allowing room for any movement of the rods, and then ground each of these to the firewall. If they are rusty, scrape them clean where contact is made. The wire conduit that runs to the base of the distributor on some cars should be grounded the same as other wires or rods.

In some instances, the noise being heard in the receiver will be caused by loose wires at the headlights, horn or horn button, tail light, spot light, stop light or dome lights. All connections to these items should be checked to see that the contact surfaces are clean and all wire connections are tight. Sometimes the connecting of a .5 microfarad condenser to the hot battery lead feeding one or more of these accessories will have a decided effect on the ignition noise. This is especially true of the dome light wires when a roof type antenna is being used.

Any metal parts about the set making imperfect or intermittent contact with each other will cause noise in the speaker when the car is subjected to a jolt, whether there is any measurable potential difference between these parts or not. This interference is due to the instantaneous change in resistance of the receiver to ground that occurs when another ground conductor touches or is disconnected from the receiver.

To guard against the possibility of such noises, choke wires, speedometer cables, copper tubes, battery cables or the like should not be allowed to rub on the radio container. Also, always make sure that the chassis mounting bolts and the bolts that hold the brackets are securely tightened so that there will be no possibility of the contact resistance to ground changing.

If the foregoing information is insufficient to give suppression of motor interference, write in detail to the Grigsby-Grunow Company.

ESSEX TERRAPLANE 6-8—1933

Receiver is usually mounted in center of firewall and is bonded to the firewall, using the bond provided on the receiver.

Install a condenser on the generator and another on the ignition coil.

Shield antenna lead from set as high as possible and ground at two or more points.

Bond motor block to the firewall.

Bond steering post to firewall.