1920

ESSEX

ESSEX MOTOR CARS

EVERY locality now knows Essex for the accomplishment of some great feat. In hundreds of ways it has showed its supremacy in all kinds of tests. Economy, endurance, reliability, speed, hill-climbs, easy riding, acceleration — these are some of the things Essex has proved, and thereby established its right to leadership.

COPYRIGHT 1921. ESSEX MOTORS, DETROIT

THE STORY OF THE ESSEX

The Essex crossing Iowa on record making transcontinental journey from San Francisco to New York in 4 days, 14 hours, 43 minutes.

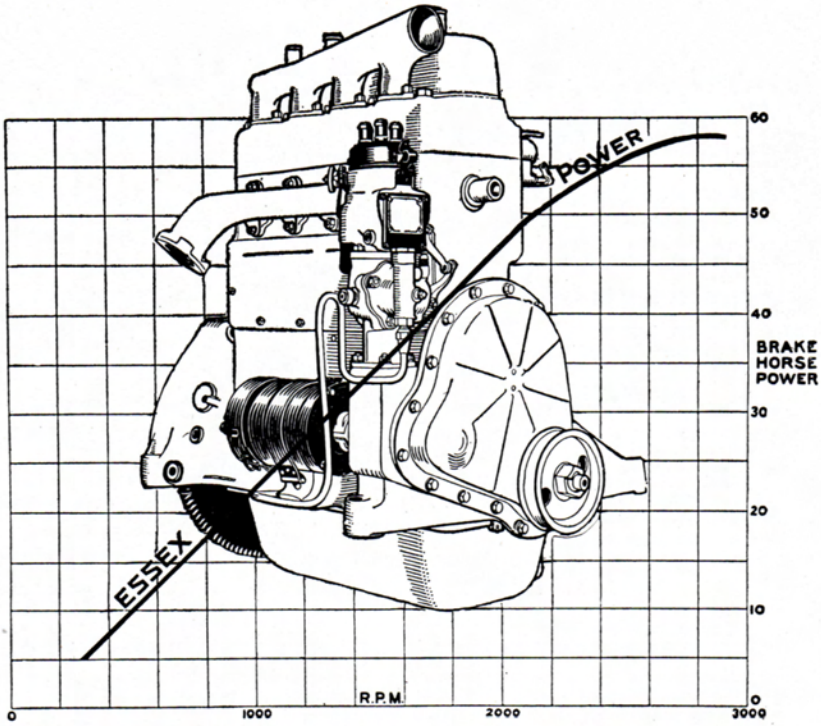

The patented Essex motor is small and compact, yet it develops 55 horsepower

The Essex is two years old; two years of brilliant success.

Nearly 50,000 Essex cars are in service.

Without a word to identify it as the product of the men who build the Hudson Super-Six, it emerged from the obscurity of an unknown car and thrust itself ahead by the force of unqualified merit to the position of one of the most talked of cars in the world.

In the fullest sense Essex has established a new type, in a field quite clearly apart from any other car.

It is a light car. It brings a new light car standard—its own. It has been accepted as a new standard among motorists, by which other light cars must stand for measurement.

The swing of interest to light cars made a compelling demand for the creation of a light type, that in all essentials of performance,

fine workmanship, comfort and appearance, could take rank with the large, costly cars. People wanted a smaller, better car.

This is indicated by the way Essex has held the public eye, as perhaps no other car ever has.

It Set a World's Selling Record

How men wanted this kind of a car was proved by the world's selling record Essex established in its first year, when $33,000,000 was paid for 22,000 Essex cars. And it is worth more than passing note to observe how many of these Essex owners formerly drove large, high-priced cars.

Yet there could have been no Essex without the Hudson Super-Six as a forerunner.

All the knowledge gained in building the famous Super-Six; all that was revealed by the scores of speed, power and endurance contests by which Hudson established its famous records, was applied in the design and the manufacture of the Essex.

But these facts were never used to gain recognition for Essex. It was required to earn its own way, to make its own mark stand for the things men seek in a motor car.

We need only have linked its name with Hudson to insure its

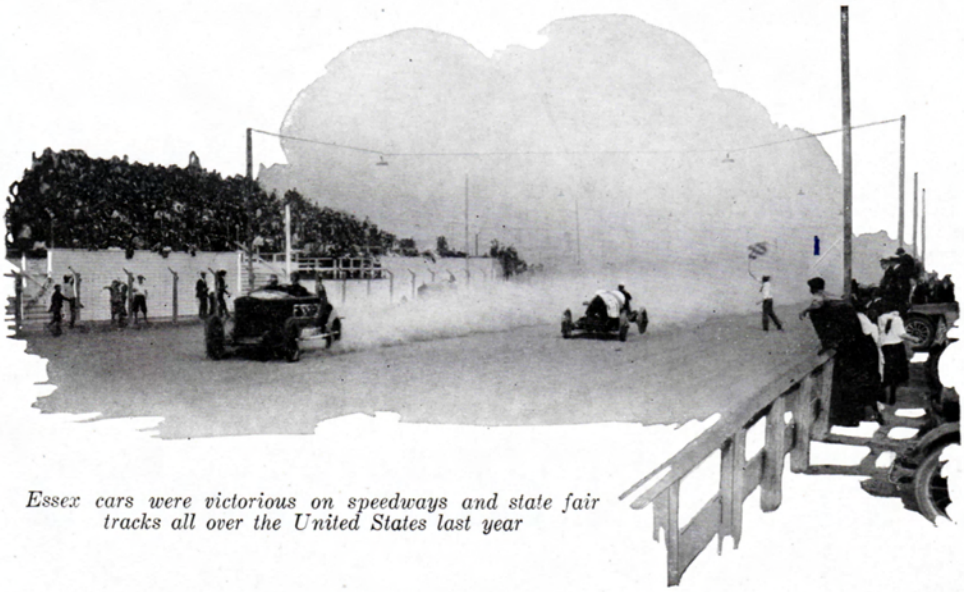

Essex cars were victorious on speedways and state fair tracks all over the United States last year

The Touring Car

THE Essex is easily driven through crowded traffic, responsive to every call for power and speed. And it is of such size as to find parking space where larger cars cannot be left. The Touring model has passenger capacity for five. It offers the pleasure, comfort and performance ability of larger, higher priced cars with the added advantages of low upkeep costs, and great tire and gasoline economy.

immediate acceptance. But we did not! The Essex, typifying a new quality ideal, was required to justify its peculiar merits, as a new standard of light cars, independent of Hudson prestige.

And confident of its ability to give account of itself, we sought to establish its qualities in the same way that Hudson is famous for, the test of the speedway and the punishment of long, fast, cross-country driving.

50 Hours at Over 60 Miles per Hour

Thus Essex, under supervision of contest officials of the American Automobile Association set the 50-hour endurance record of 3037 miles, on the Cincinnati speedway, a mark never before made and not yet equalled.

In three separate tests, using the same car, it traveled a total of 5870 miles, in 94 hours, 22 minutes, averaging more than a mile a minute.

It set every speed and endurance record for cars of its motor size, from 1 to 50 hours.

It established the world's 24-hour mark for road driving, covering 1061 miles over snow-covered Iowa highways.

With a privately owned car that had seen 15,000 miles of service, it unofficially broke the world's 24-hour dirt track record, of 1261 miles at Dallas, Texas, averaging over 50 miles an hour.

But the greatest Essex accomplishment, the greatest proof of Essex endurance, was breaking the transcontinental record from San Francisco to New York—3347 miles in 4 days, 14 hours, 43 minutes, beating

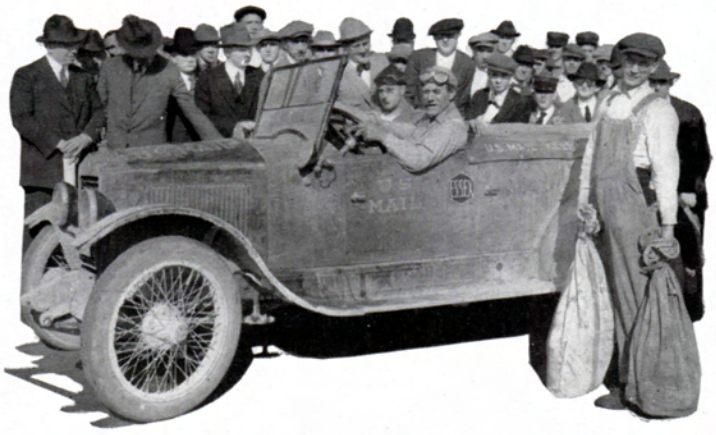

Arrival at San Francisco of one of the four record making transcontinental Essex cars

The Roadster

THE Roadster is smart and trim in looks with a particular appeal to youth. As a car for the business man its utilities are many, offering not only beauty and charm, but great carrying capacity for large and bulky packages. Salesmen who make long trips and spend many hours in their cars choose the Essex because of its great riding and driving ease.

the best previous record by 12 hours, 48 minutes.

Four Essex cars crossed the continent; two in each direction—during a period of 11 days. The first car from New York to San Francisco made the trip in 4 days, 19 hours, 17 minutes, beating the best time this way by over 22 hours.

New York post office officials opening the first pouch of U. S. Mail ever carried across America by motor car—brought by the Essex on its record-making trip

Each of the four cars made the complete trip and made better time than had ever before been made by any other car.

On these four trips across America, United States mail was carried across the continent by automobile for the first time in history. The cars were not driven at any point by professionals, but the entire trip was run by Essex dealers along the route. In all, probably 25 drivers took the cars across the continent, which is an even greater testimony of the performance and reliability of the Essex.

Local records established by Essex in all parts of the country, include many of the most famous performance tests in America.

In a nation-wide week of contests to prove Essex efficiency, many privately owned and driven Essex cars set records that have always been regarded as the title to foremost performance ability among motor cars in their particular localities.

Some of the record-breaking cars had already seen 20,000 to 40,000 miles of service, in their owners' hands. Some entered

Essex setting the new endurance record of 3037 miles in 50 hours on Cincinnati Speedway

The Cabriolet

THE Essex Cabriolet is an all-weather type, of roadster capacity. The luxurious finish and comfort of the Sedan is found in the Cabriolet. The doors are extra wide, opening into a roomy, comfortable interior. It is a type that appeals to men and women who use a car during all seasons for transportation in their business and daily affairs.

on tires that already had traveled from 15,000 to 23,000 miles. Many were driven by women owners.

Could any test give more convincing evidence of a car's abilities than the performance shown by these privately owned cars, which stepped from their daily use, without any preparation, to establish speed, endurance, hill-climbing and acceleration records that have never been equaled?

Essex holds practically every local hill climbing record —made in a nation-wide week of tests

These facts all point to one thing—Essex owners may go anywhere, at any time and under any conditions with the assurance that the car will give an unusually excellent account of itself.

The Essex Motor is Patented

The Essex motor is patented. Essex performance is therefore patented. For it is the product of that exclusive invention.

The patented Essex motor, no larger than many which produce but 20 to 30 H. P. at limit, develops 55 H. P. It is one of the smallest automobile motors. Yet—despite its unusual power it has all the small car advantages of economy in fuel, oil and tires; it gives the big-car kind of performance and riding ease, with the reliability, distinction and luxury of the costly cars. These are days when men are taking a rigid account of car expense. Wasteful types are passing. Factors of economy,

An Essex car was driven to the floor of Death Valley, in California, to a point 263 feet below sea level, one of the most hazardous trips in the world You can take your Essex anywhere

The Sedan

THERE is a charm and beauty to the Essex Sedan that is distinct among cars of this body type. It is compact and commodious, with a range of performance that answers every requirement. There is ample power to offset the additional body weight, and the surplus power accounts for the Essex smoothness of action, the responsiveness that heeds the slightest touch.

heretofore little considered are now of first importance. In the case of the Essex, owners have found its greatest saving is not merely in fuel, tires and oil. Conspicuous as these are, they find its endurance and consequent freedom from repair expense constitute the greatest economy.

That sort of dependability you can look forward to with sure confidence that enthusiasm has not overtold the story nor that the case is exceptional. The endurance and reliability that one Essex owner knows, now nearly 50,000 know with equal certainty.

Many regard the Essex as a smaller, lighter, and of course, lower-priced Hudson, in all the qualities of performance and endurance for which the Super-Six is noted.

In many details they are identical.

The same engineers designed them. The same factory organization builds them. Both cars are backed by the same ideals of construction. They stand on the same foundation, and enjoy equal prestige with all who know their respective qualities.

Enroute to San Francisco from New York, the Essex touched Chicago and set a new time mark between New York and Chicago—24 hours, 43 minutes and 50 seconds

Brief Specifications

The engine has four cylinders, 3⅜″ bore by 5″ stroke—179 cubic inches—18.2 H. P. by formula for State Licenses.

Many features are patented and exclusively "Essex." The carburetor and cooling system are unique, and are easily regulated to give exceptional economy under varying conditions.

Cooling is automatic (thermo-syphon)—no pump is used. The radiator is equipped with shutters.

The transmission has three forward speeds and is in a unit with the engine. Roller bearings are used throughout.

The front and rear axles are also fitted with adjustable taper roller bearings. Brakes are unusually large and easily adjustable.

Tires 32″ x 4″ straight side; Q. D. demountable rims. Extras are carried at the rear.

Some of the illustrations shown feature certain equipment not included at standard list price, such as extra tires, tire covers, top covers, etc.

Essex Motors reserve the right to make changes or improvements at any time without incurring any obligation to install same on cars previously sold.

WATCH
the
ESSEX